Lauren Sabine **2015-11-12**

NordLink - Weekly Meetings

NordLink
Basic data

- Ertsmyra-Vollesfjord-Wilster
- Bipole VSC at ±515 kV, 1400 MW.
- Each pole at each station is configured as an asymmetric monopole.
- 50 km DC OH line
- 571 km subsea cable,
- 54 km land cable

Introduction
Why do we use HVDC Light?

- Connect AC networks asynchronously
- Support the AC networks (SVC)
- Black start capability
- Fast and accurate power flow control

Nordlink
Monopole vs Bipole Converter

Asymmetrical monopole:
A single converter that is connected between the positive or the negative pole and the d.c. side neutral.
The other pole is used as metallic return path.

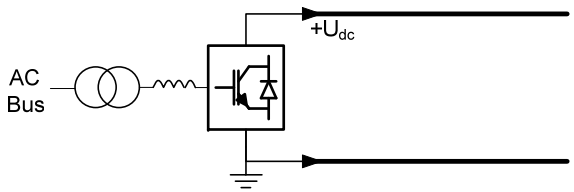

Asymmetrical monopole converter.

Bipole:
An HVDC system consisting of two poles, which during normal operation, exhibit opposite d.c. voltage polarities with respect to earth.

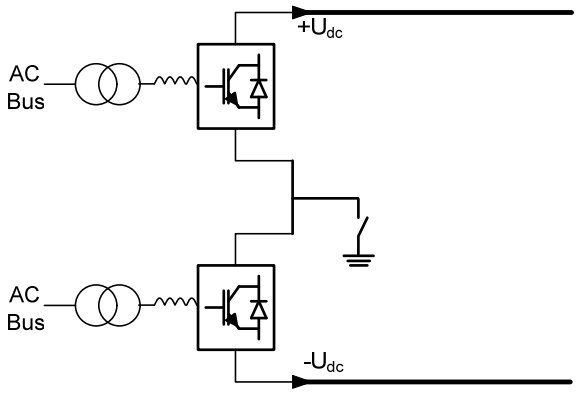

Bipole.

NordLink
General concept
Bipole with earthed neutral on only one converter

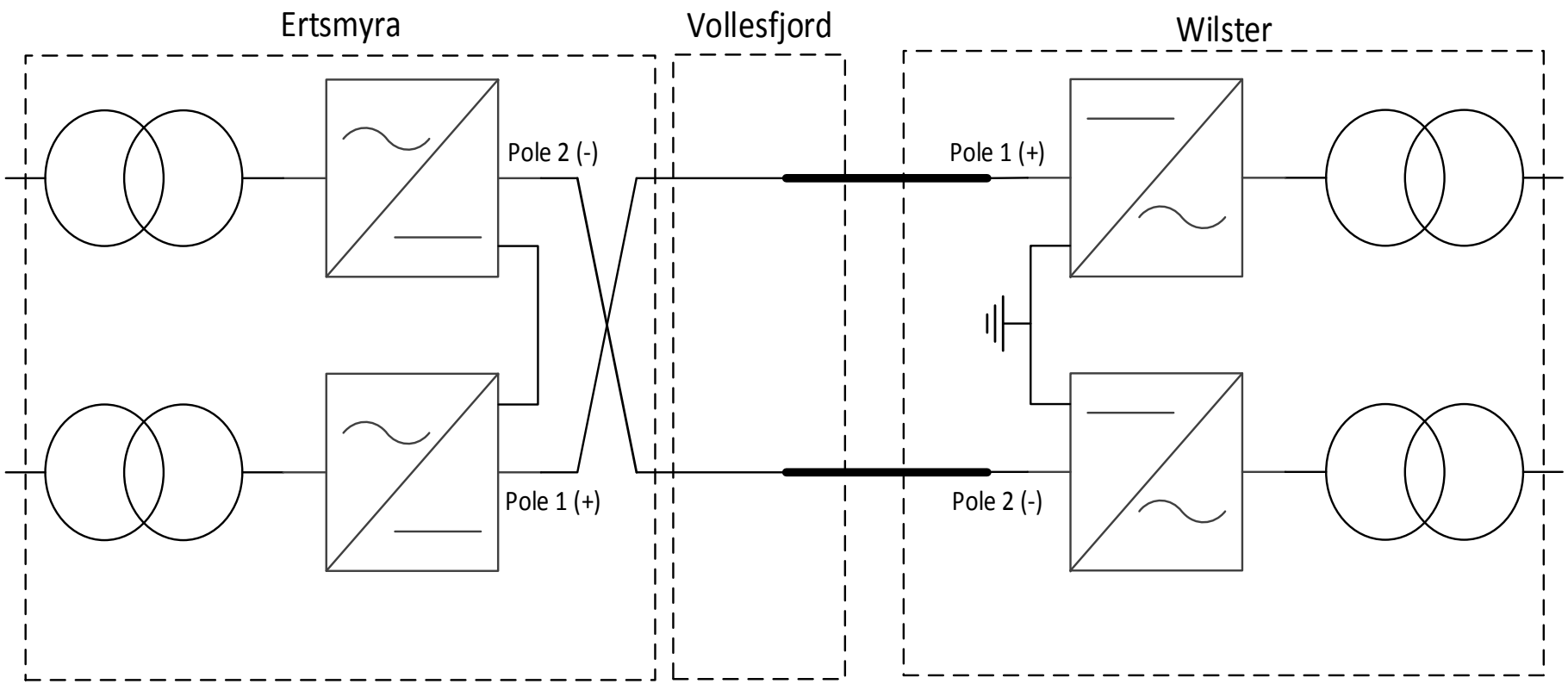

Nordlink
Single Line Diagram

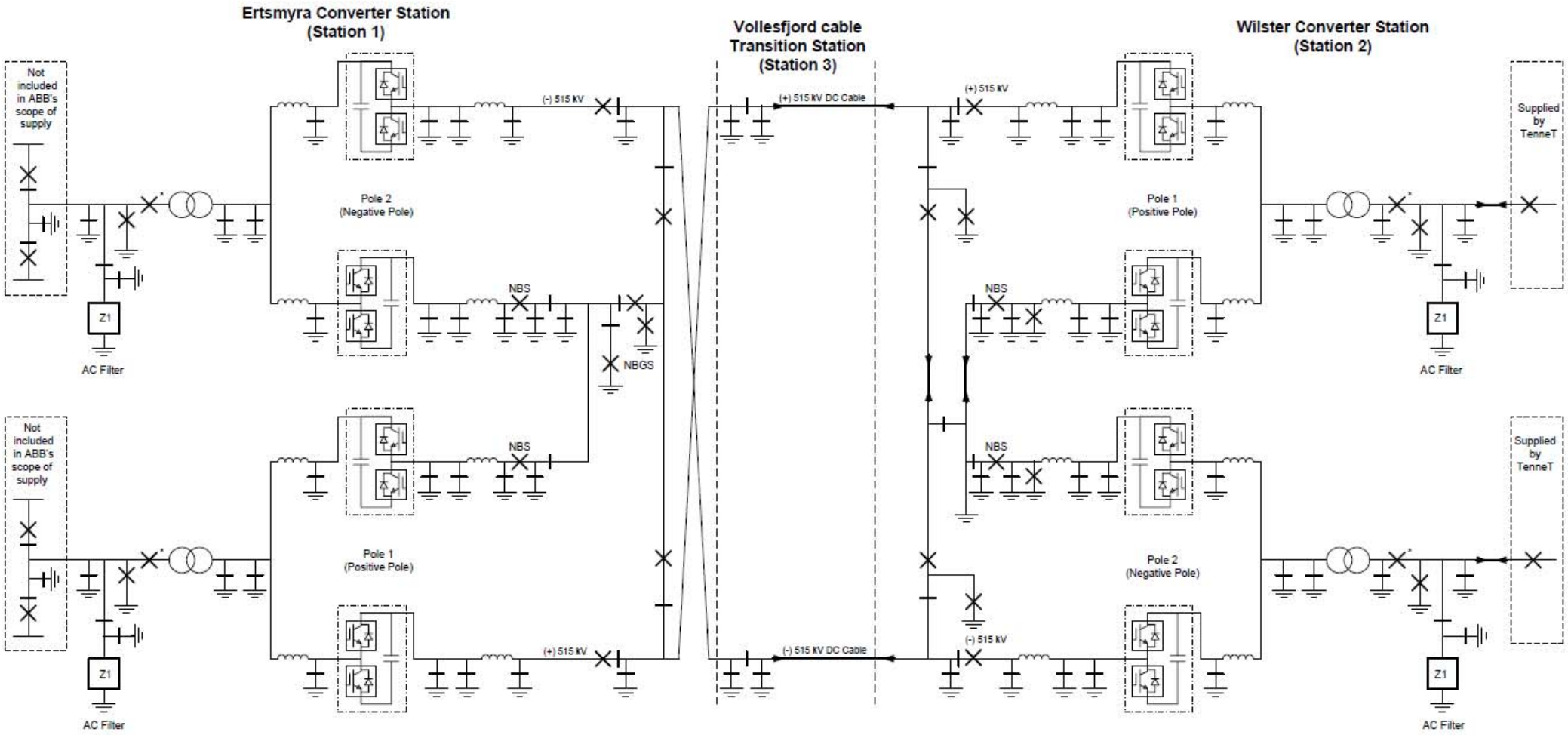

NordLink
Some Challenges

- Isolated converter neutral on Norway side
- Transition between Bipole to monopole operation
- DC OH line
  - Earth faults
  - Interference from parallell AC OH line
- Operation at 80% DC voltage
- Transport of Transformers

Nordlink
Transition between bipole to monopole operation

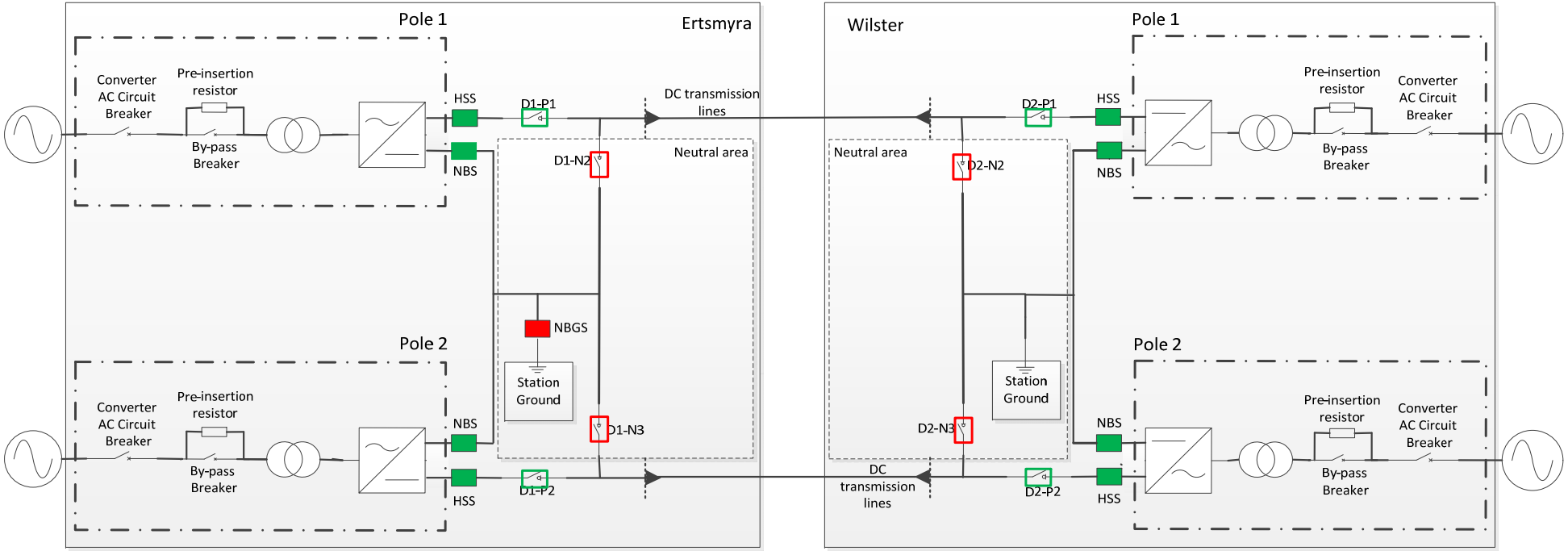

Nordlink
Interference from AC OH lines

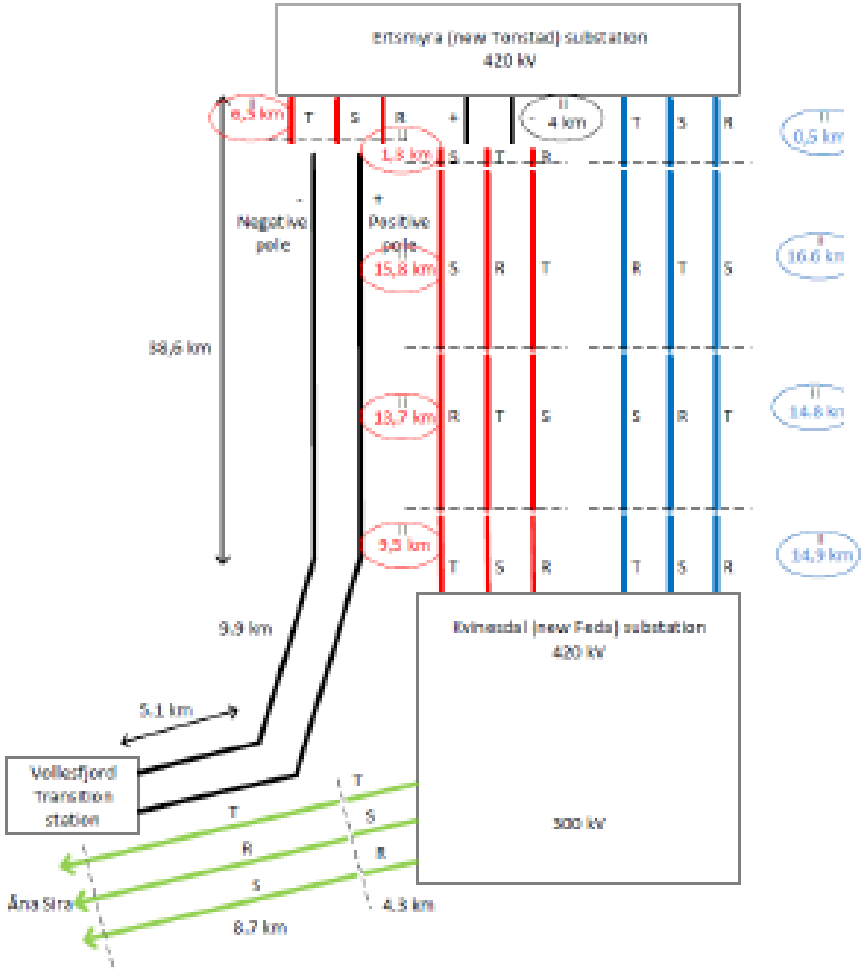

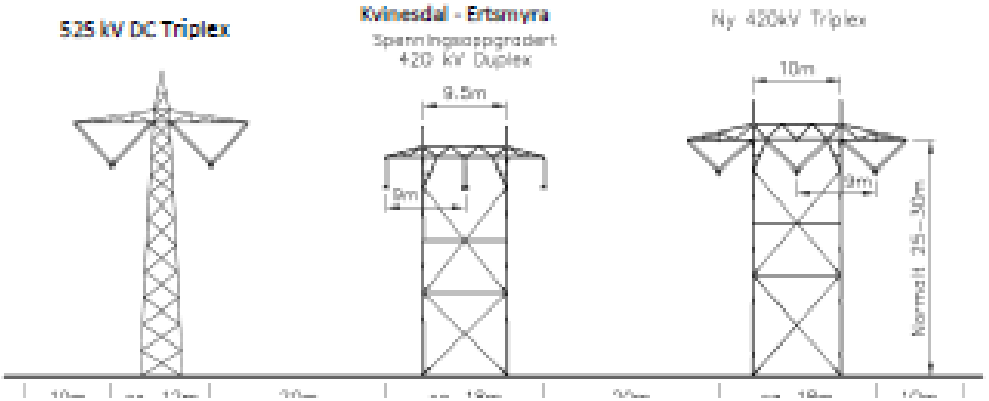

Valve Basics
VSC converter

$I_V \cdot X_V$

Active and Reactive power flow controlled by controlling the amplitude and phase angle of U_v.

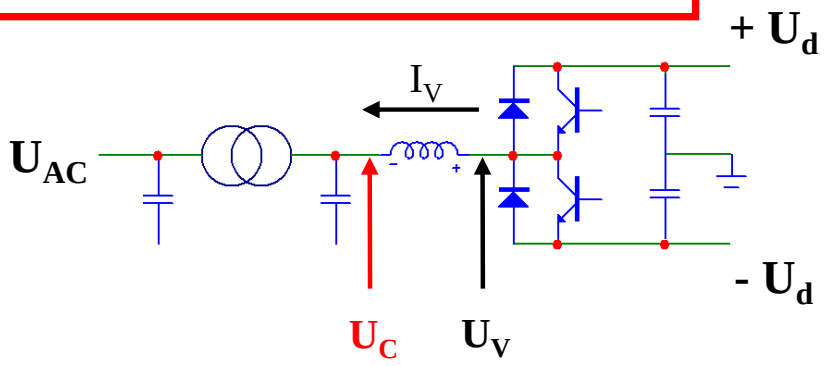

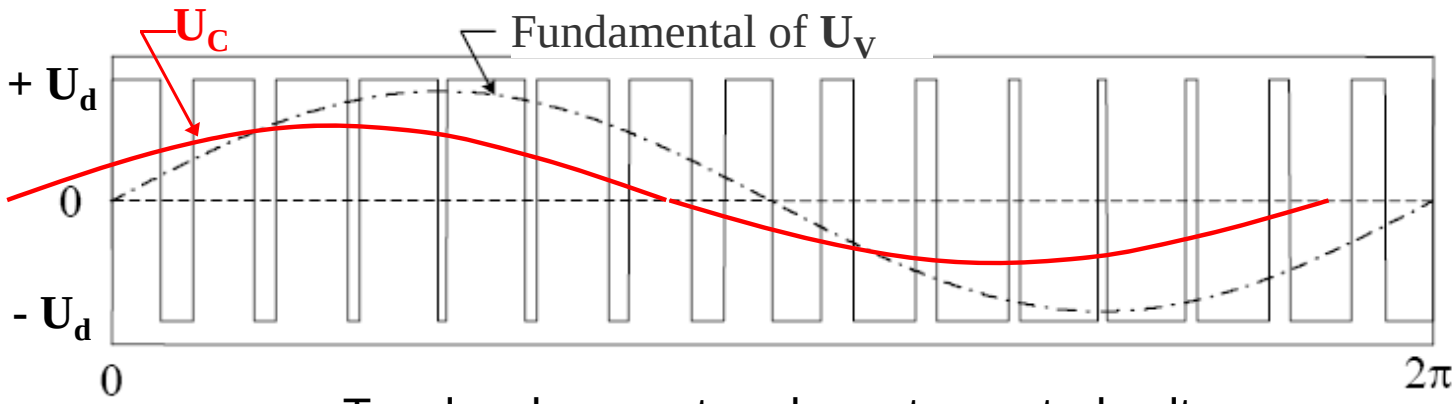

Two-level converter phase-to-neutral voltage

Nordlink Technology

2-level converter

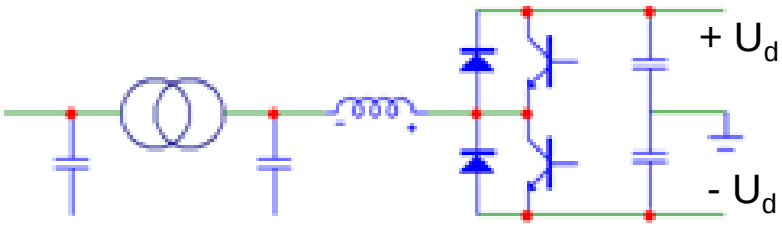

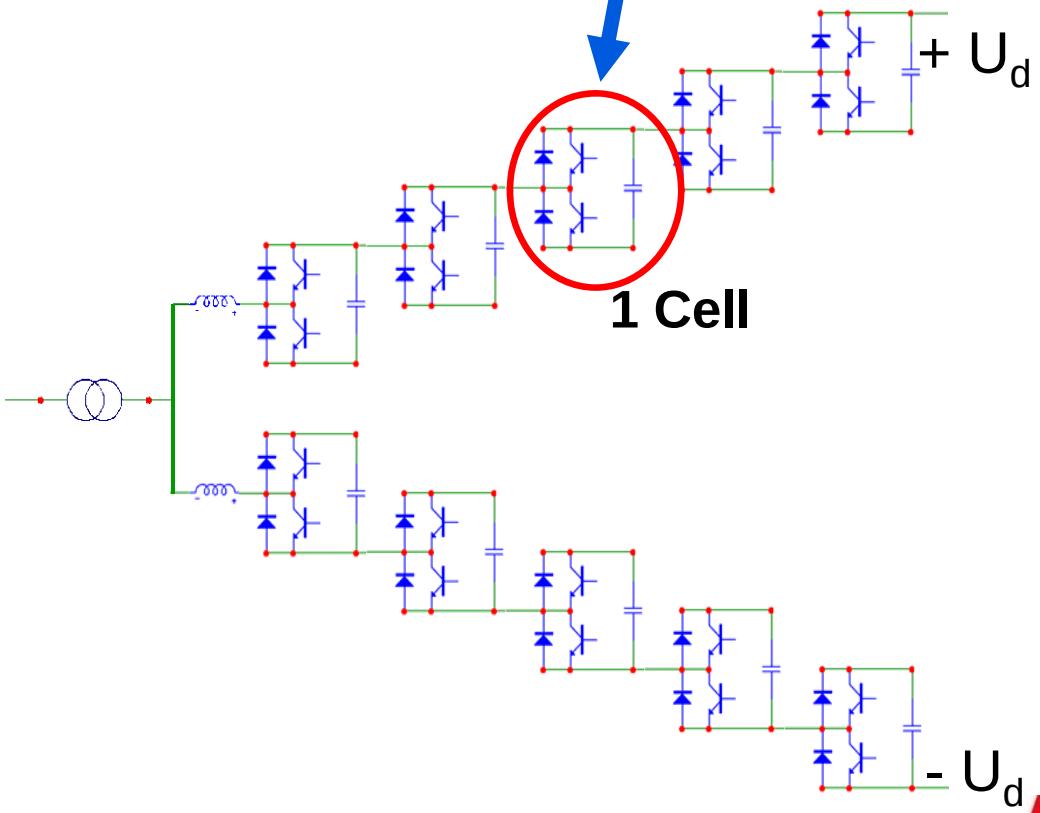

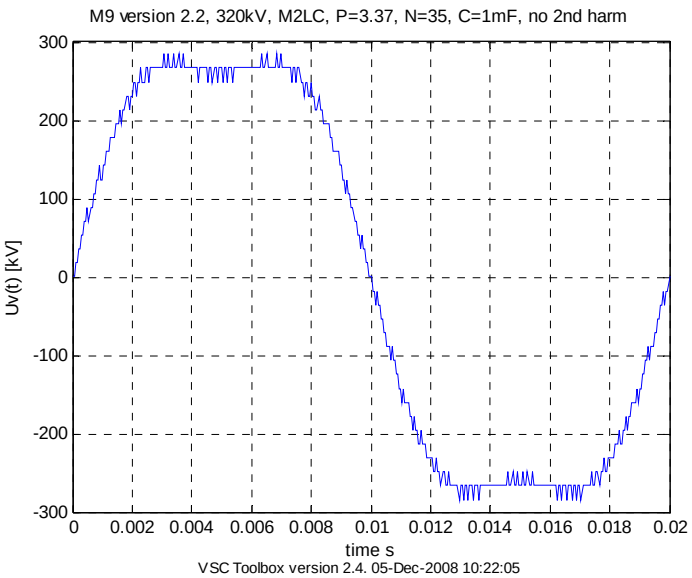

NordLink
ML2C principle

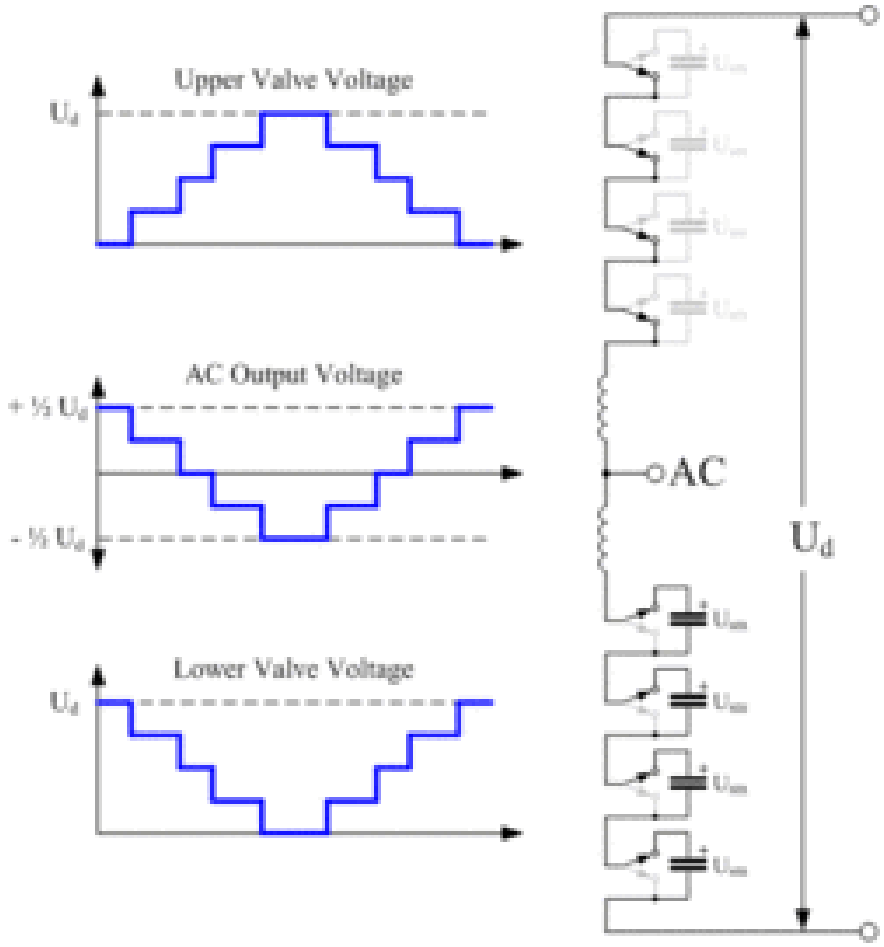

Valve Basics
VSC converter

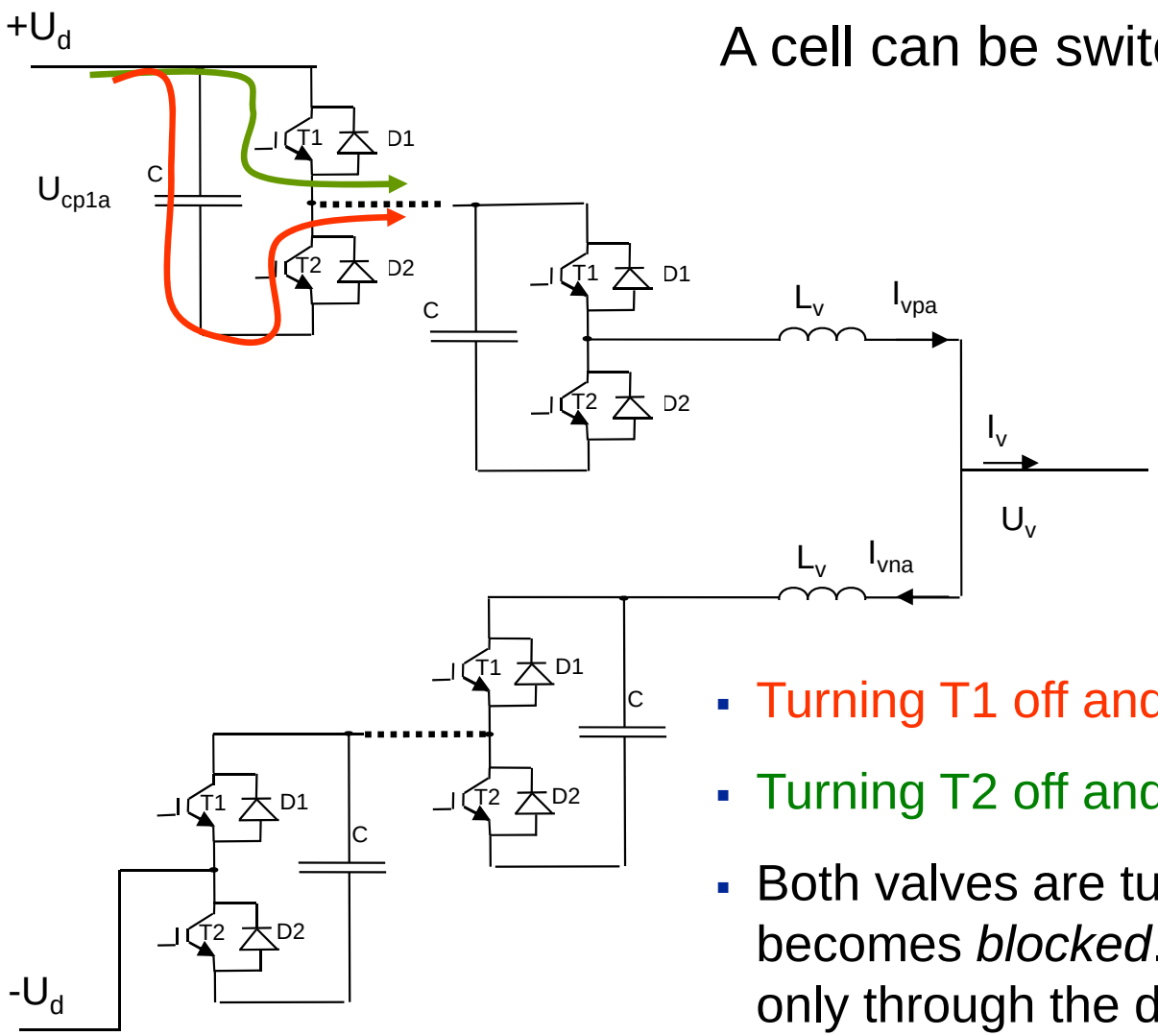

A cell can be switched in three modes.

- Turning T1 off and T2 on
- Turning T2 off and T1 on
- Both valves are turned off, the cell becomes *blocked*. Current is conducted only through the diodes.

Valve Basics
VSC converter

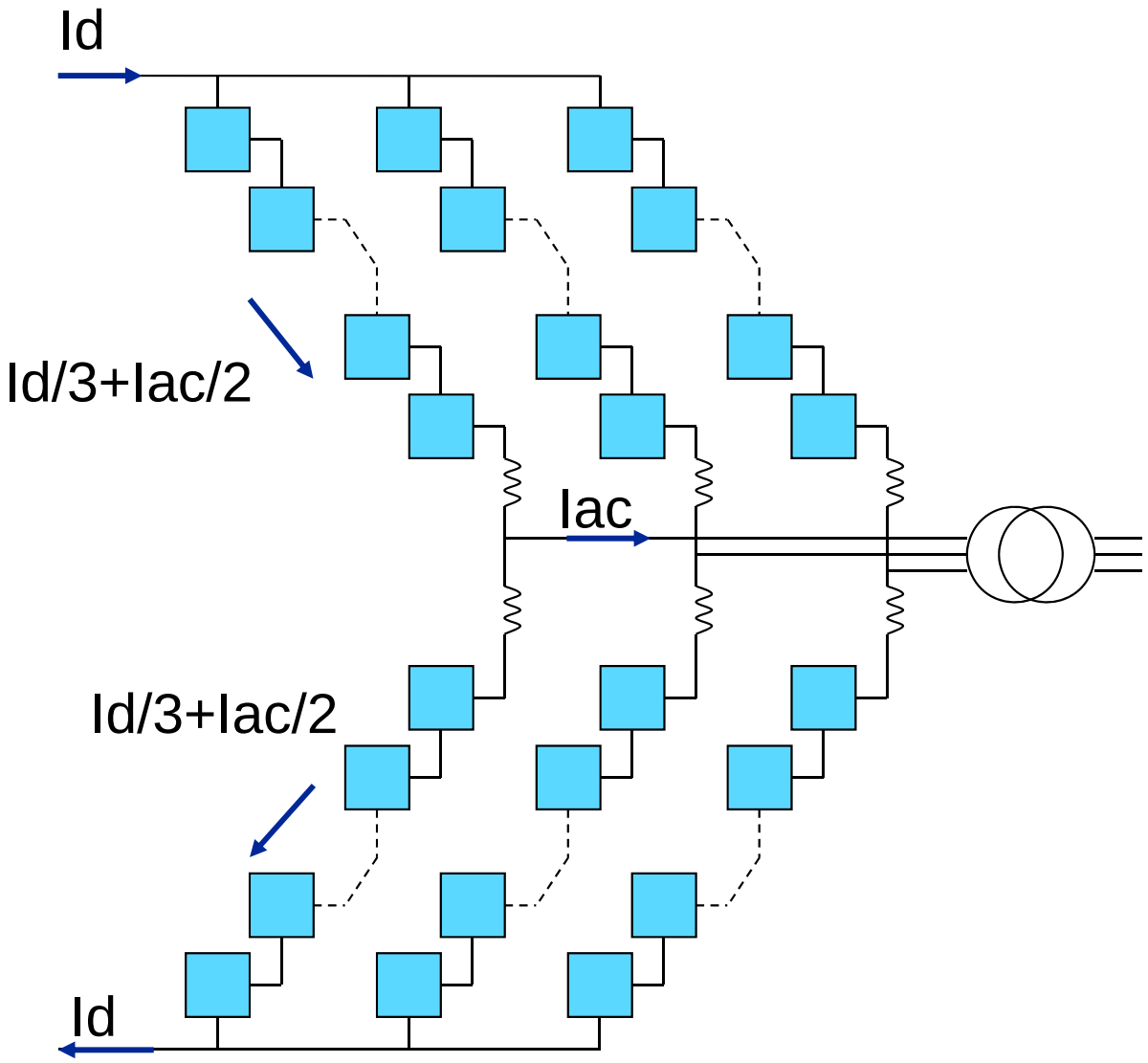

Electrical Design
Cell capacitor charge and discharge

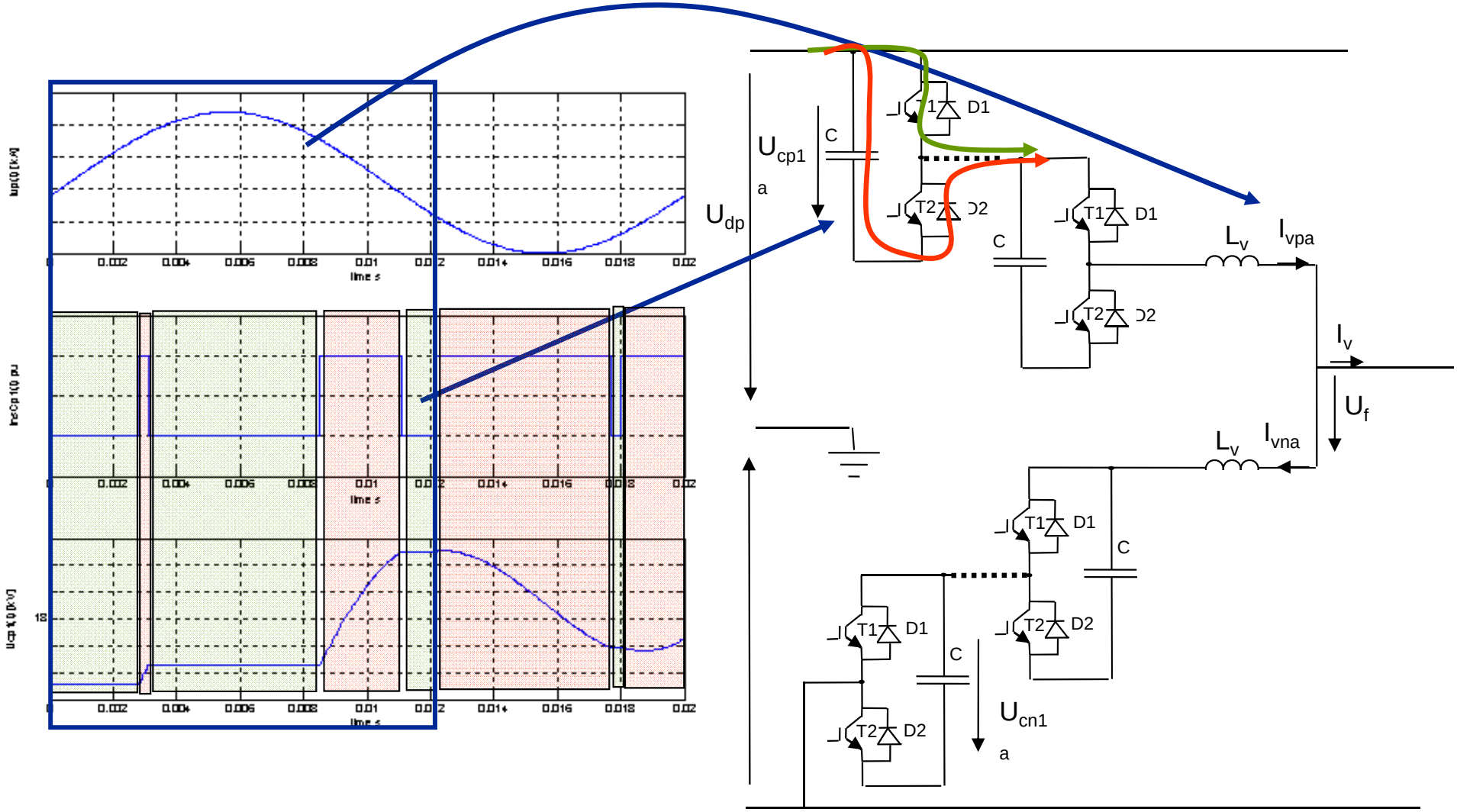

Electrical Design
Cell capacitor charge and discharge

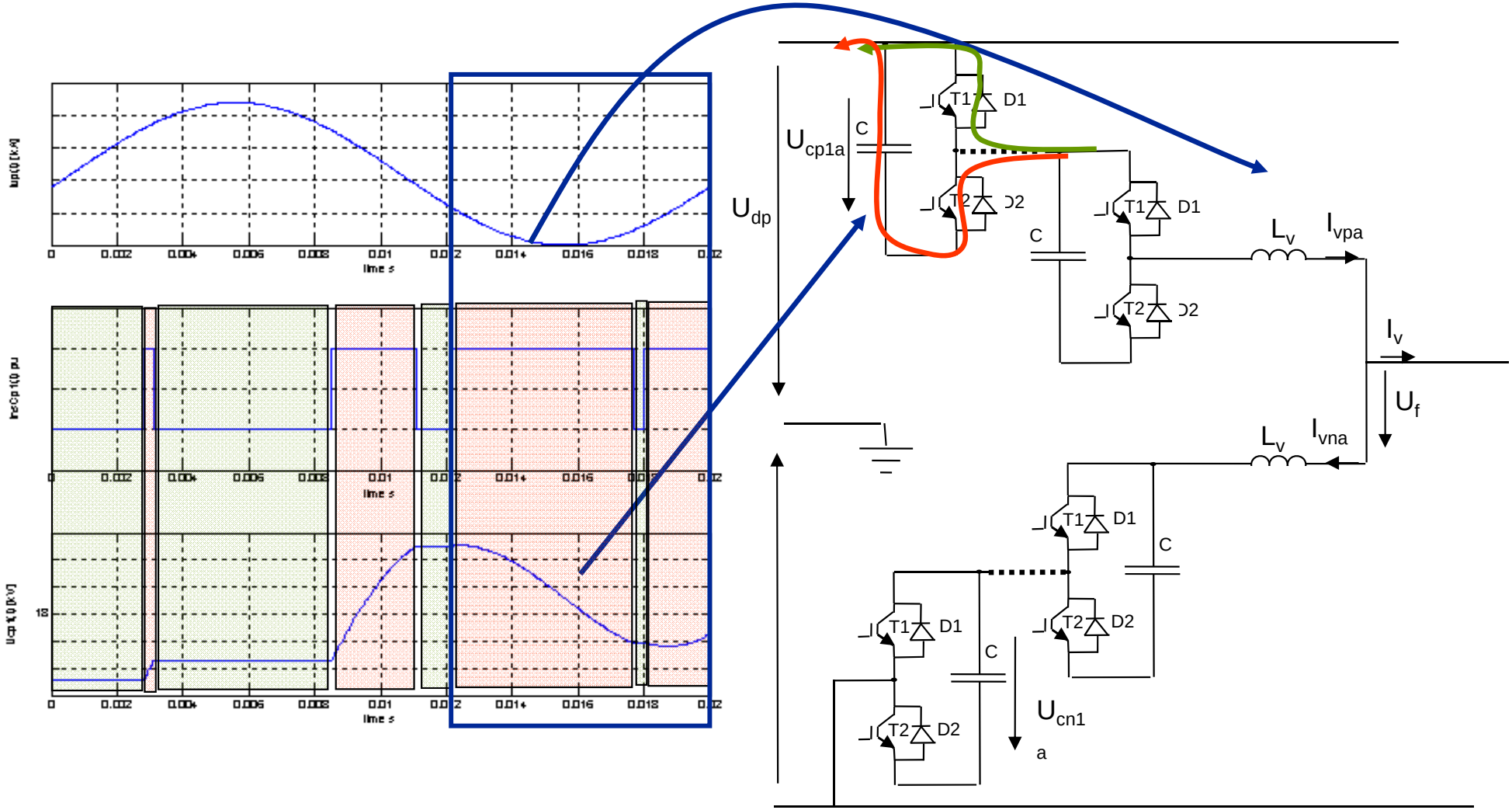

Mechanical Design
Valve arm

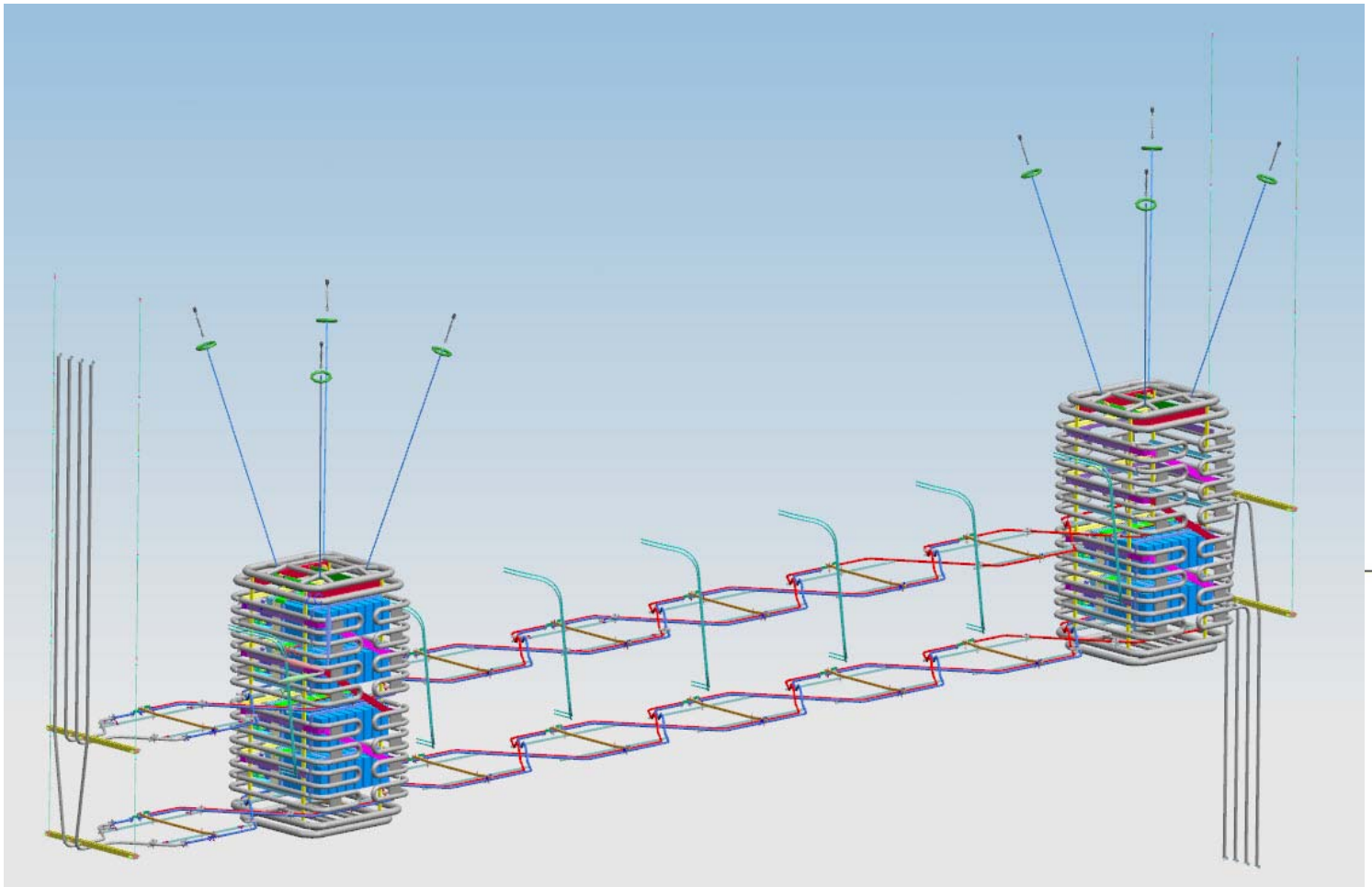

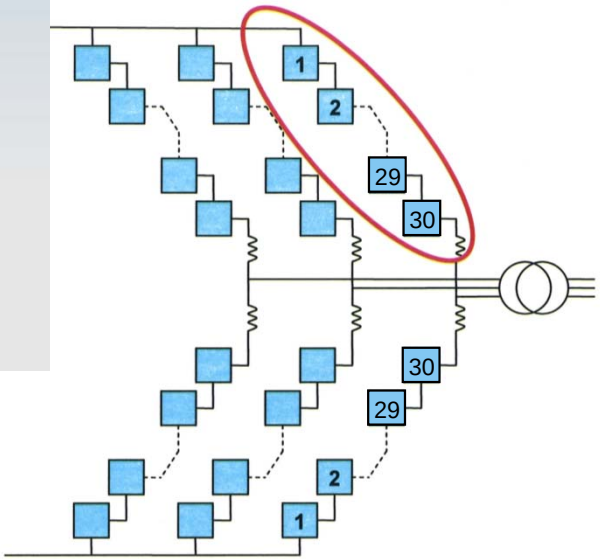

NordLink
Layout Ertsmyra Converter Station

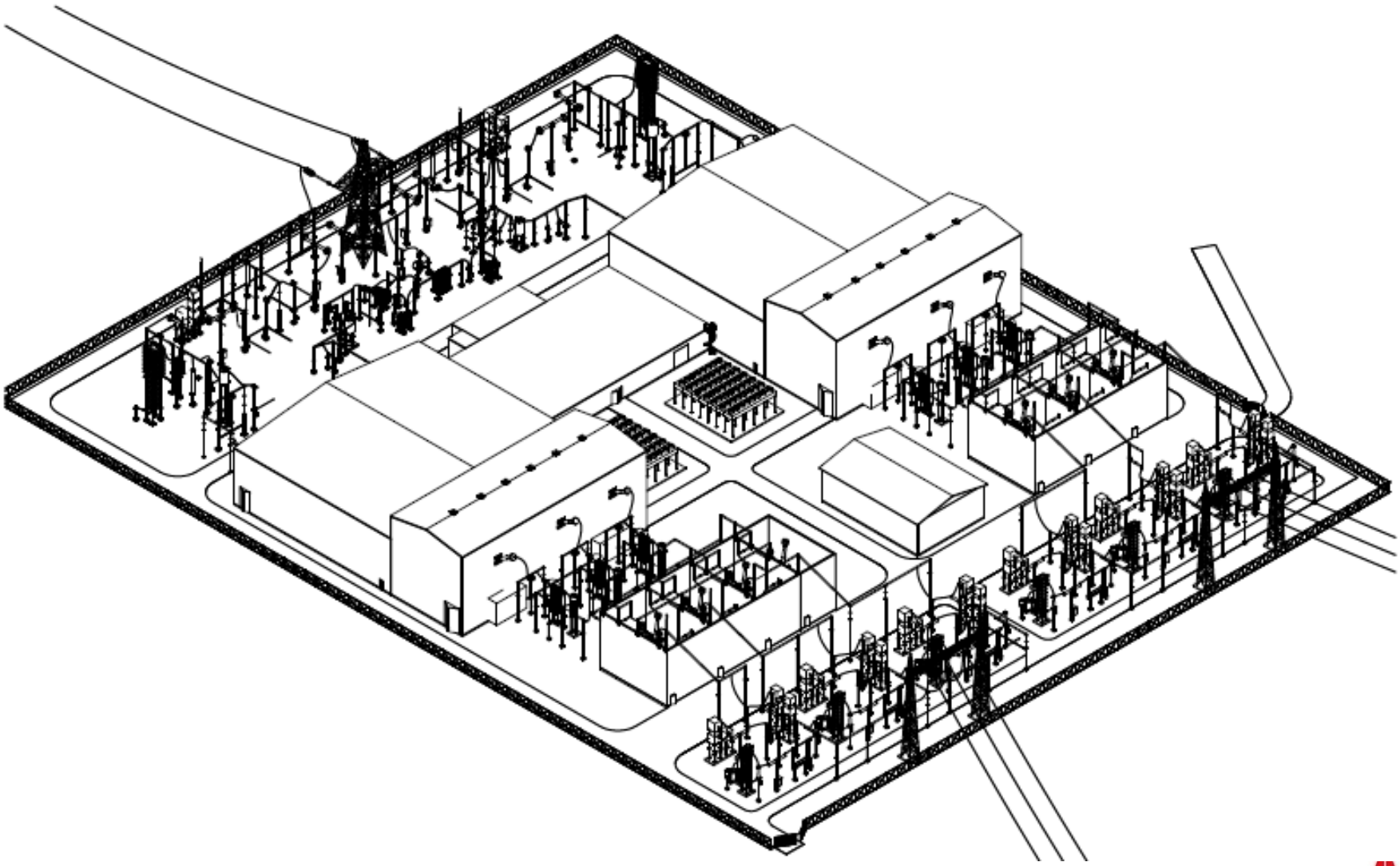

NordLink
Layout Wilster Converter Station

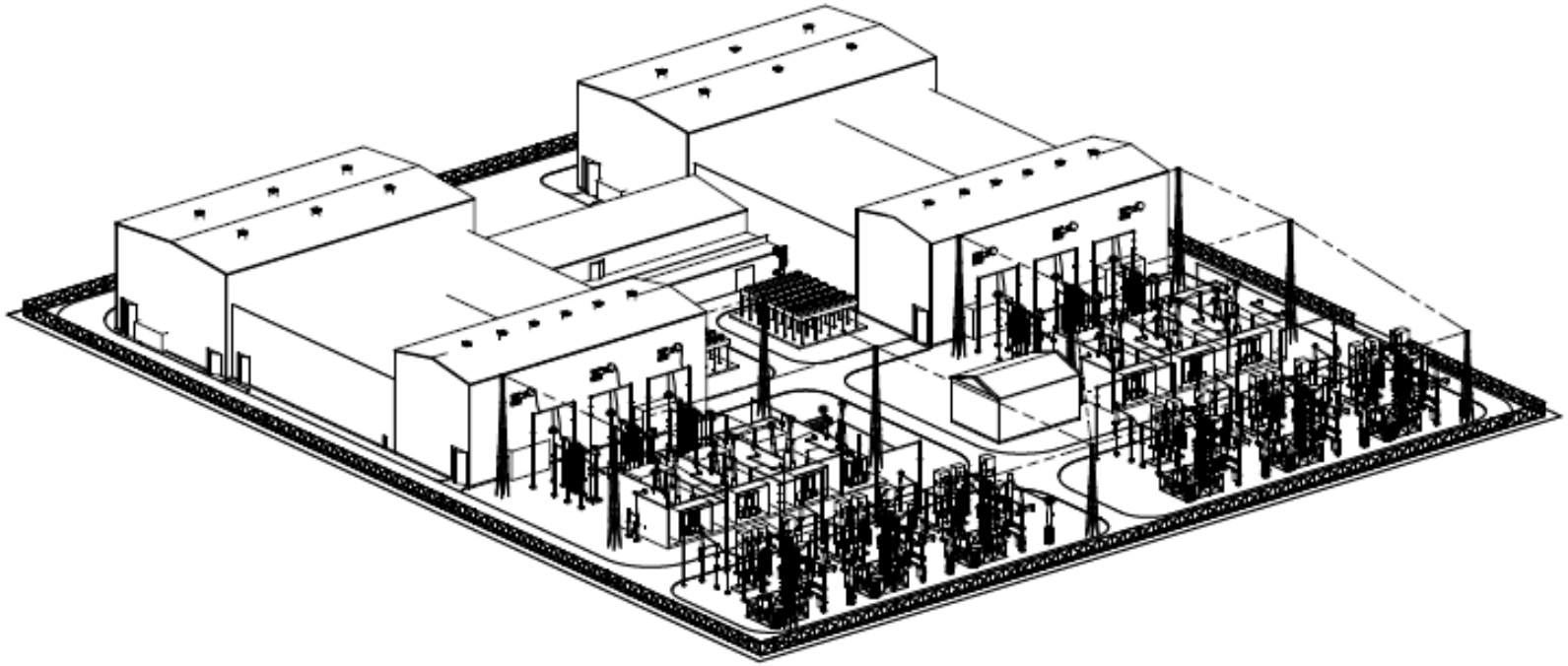

Mechanical Design

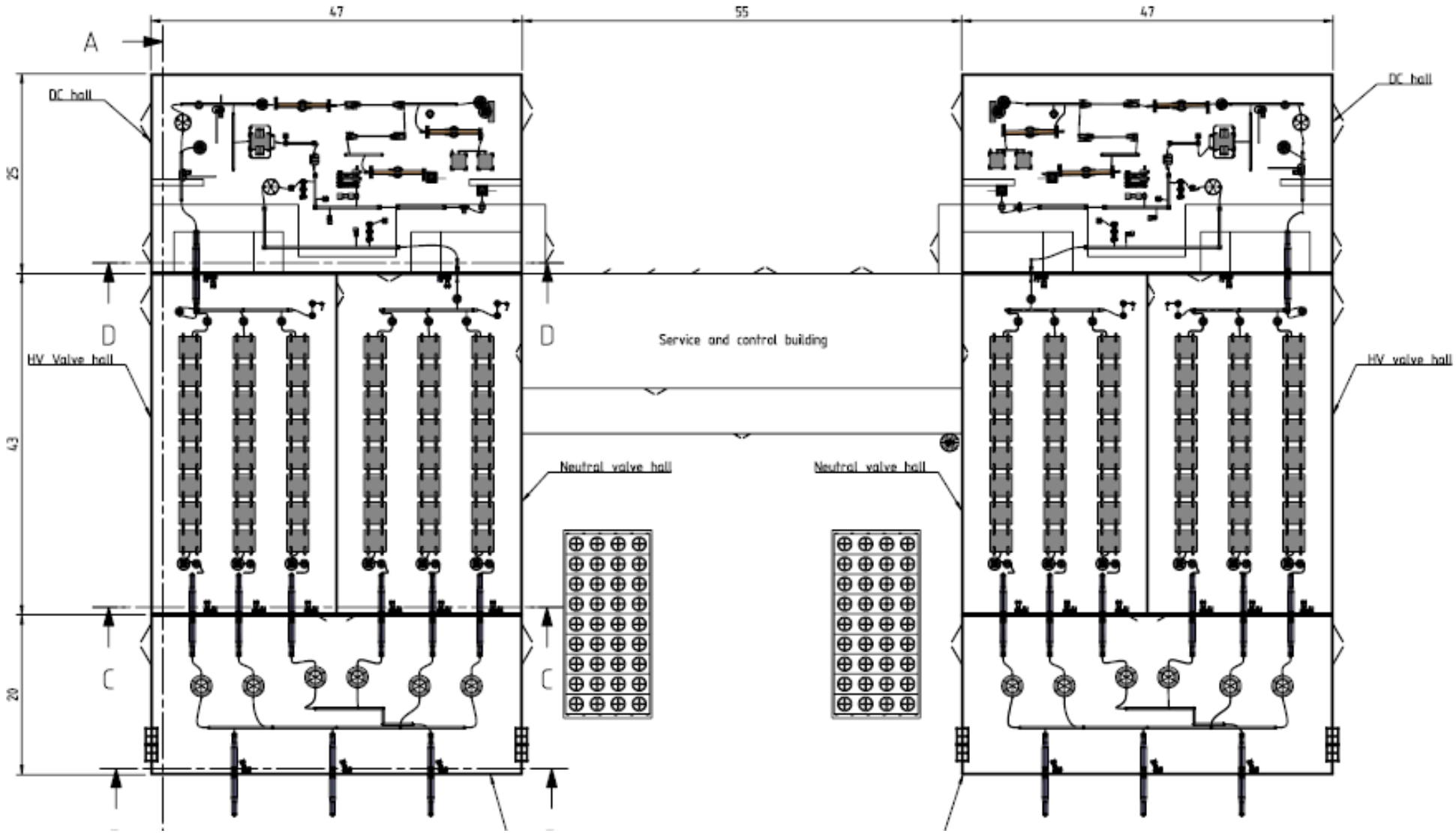

HV areas

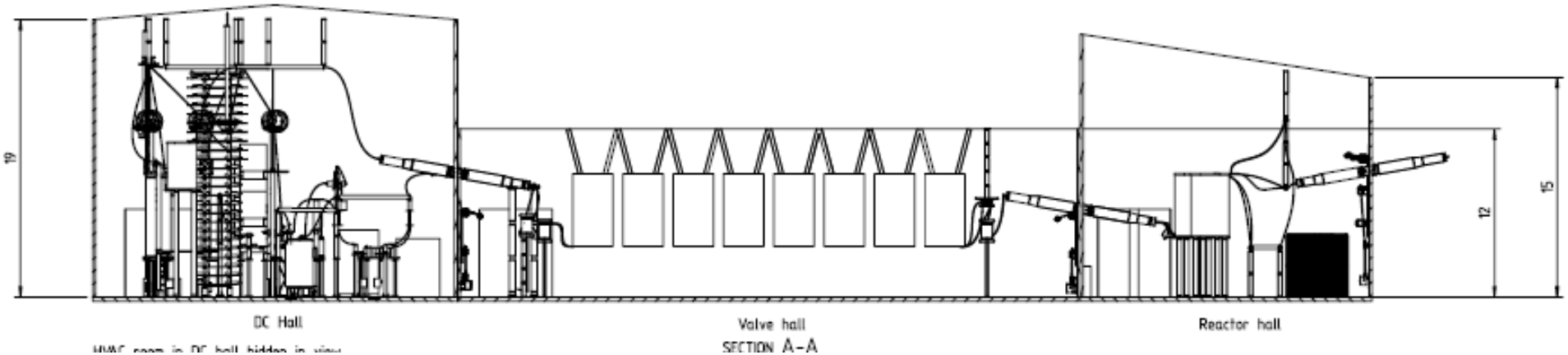

NordLink
Vollesfjord Transition Station

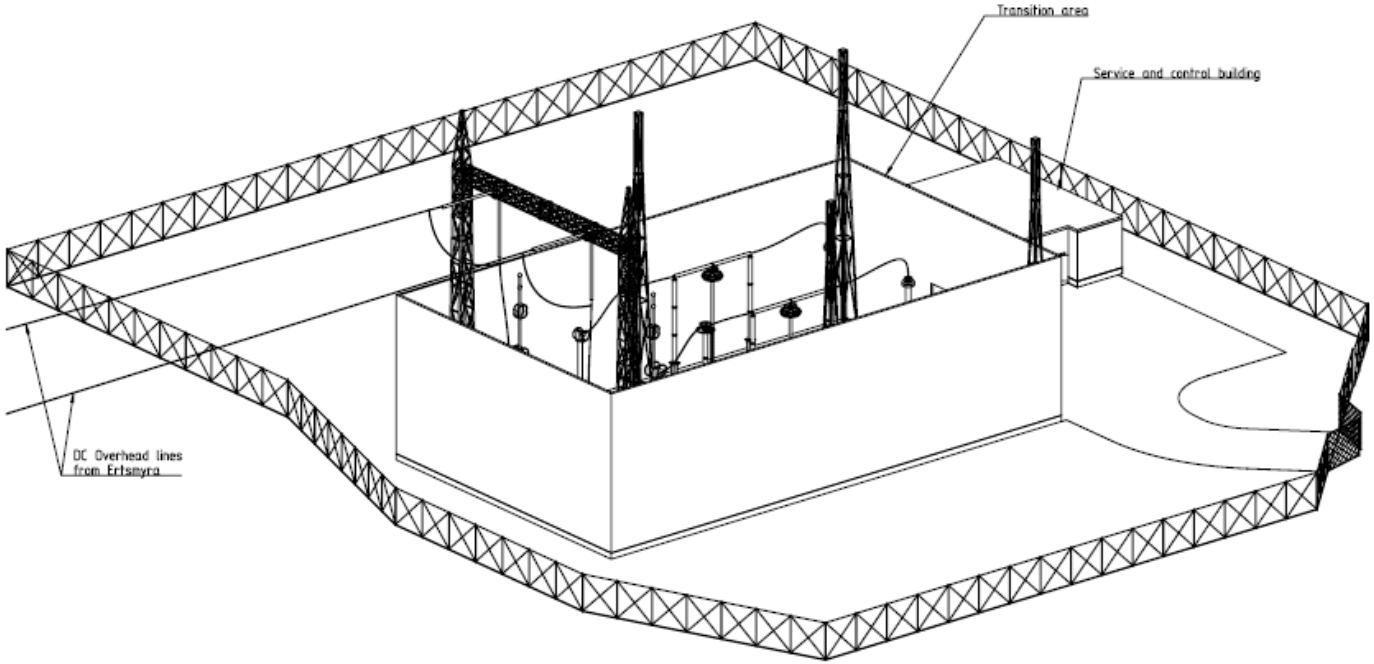

Nordlink
Converter Transformers

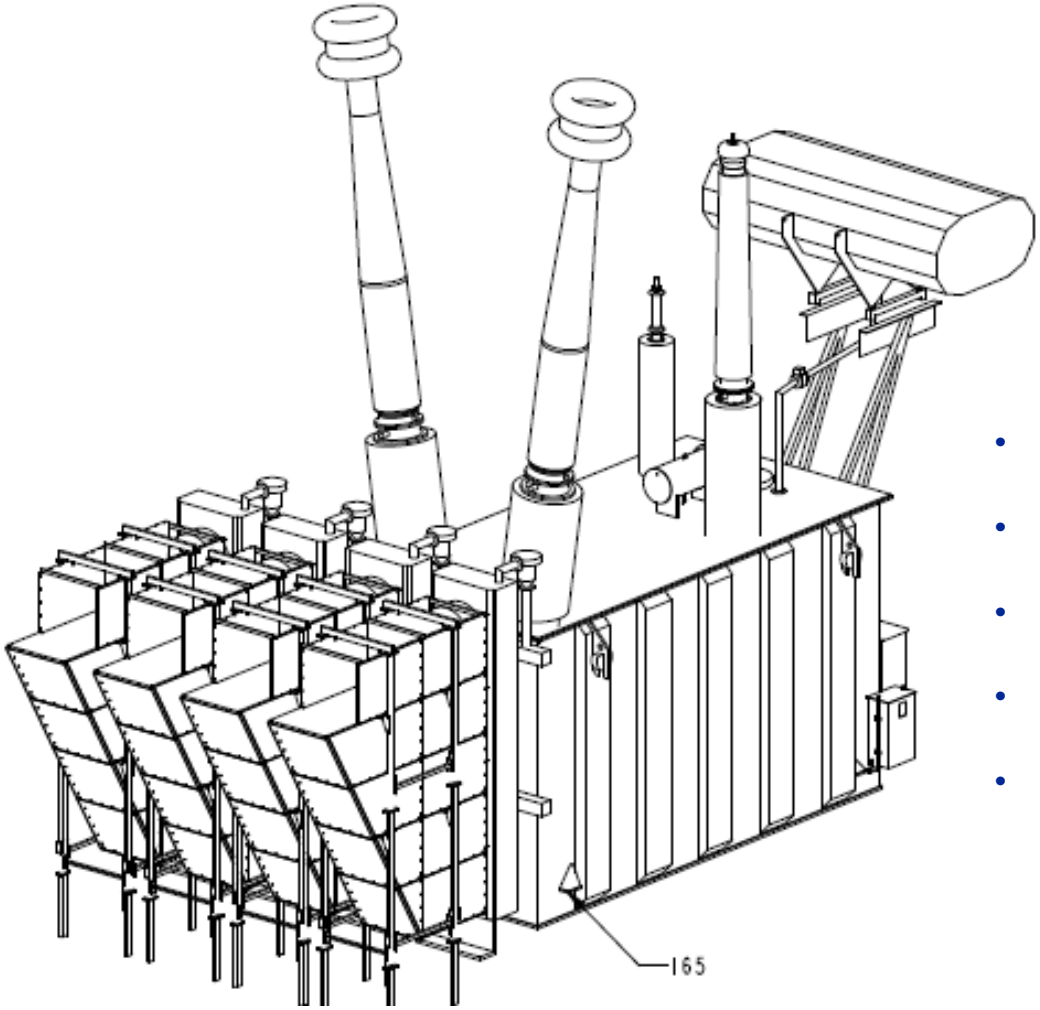

- Single phase units
- Y-Delta (delta on converter side)
- DC component on converter side
- Tap changer on line side
- Line side neutral solidly earthed

Nordlink
Ertsmyra Site

Nordlink
Ertsmyra Site

Power and productivity
for a better world™

ABB