EMC SOCIETY German Chapter

IEEE

Student Contest 2022

Sponsored by the German Chapter of the IEEE EMC Society

Start date: 01.03.2022
End date: 30.11.2022

Eligible participants:

Students of Electrical Engineering and Information Technology or similar subjects with Bachelor degree or below

Contact:

Send the completed solution sheet via email to: Prof. Dr.-Ing. Matthias Hampe, m.hampe@ostfalia.de

Improve the EMC of the DC-to-DC converter below!

Below you can see the simulation model of a discrete switching converter. In practice, this circuit is usually implemented in an IC. However, improve the EMC of this discrete DC-to-DC converter by appropriate measures.

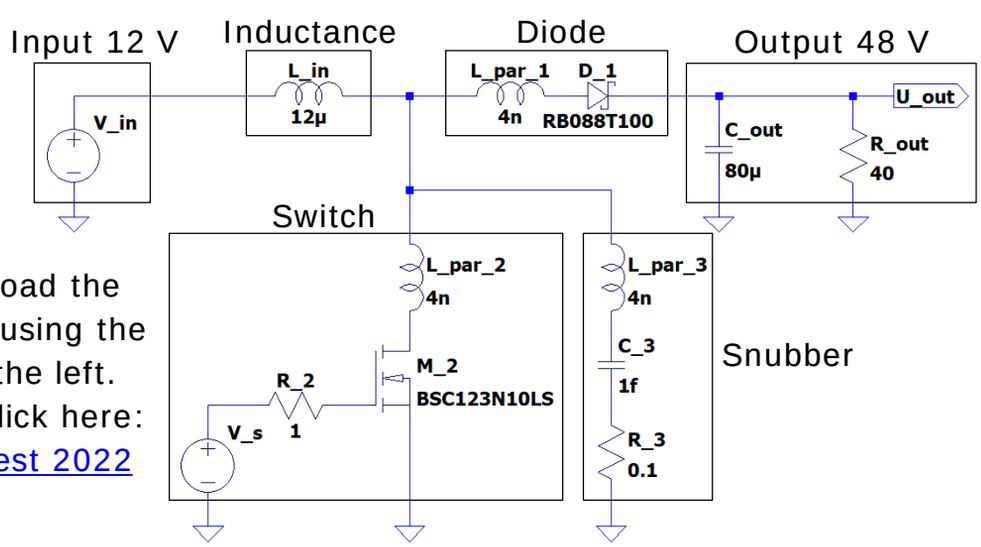

Please download the LTspice model using the QR code on the left. Alternatively click here: [Student Contest 2022]

EMC of DC-to-DC converter: task and rules.

1. Modify the switching operation and the snubber in such a way that the difference of maximum and average output voltage in steady state becomes as small as possible.
2. The average output voltage in steady state must be in the range from 47 V to 49 V.
3. The circuit efficiency, defined as the ratio of average output power and average input power, must be greater than 92 % in steady state. The switching source is to remain unconsidered.
4. The main evaluation criteria are the voltage overshoot in steady state and the justification of the changes made. As a secondary criterion, circuit efficiency is also considered.

What is there to win, besides fame and honor.

1st price:	Winner certificate and EMC book voucher 200 €, IEEE EMC Society Membership 1 year
2nd price:	Certificate and EMC book voucher 100 €
3rd price:	Certificate and EMC book voucher 50 €

EMC SOCIETY German Chapter

IEEE

Solution Sheet 2022

Sponsored by the German Chapter of the IEEE EMC Society

Participants, up to 3 students:

Email address of contact person:

Settings of your simulation:

- Period duration $1\ \mu s \leq T_p \leq 100\ \mu s$:	20.0 us
- Switch-on time $1\ \mu s \leq T_{on} \leq T_p$:	12.4 us
- Gate resistance $0.01\ \Omega \leq R_2 \leq 1000\ \Omega$:	1.0 Ohm
- Snubber capacitance $1\ \text{fF} \leq C_3 \leq 1\ \text{uF}$:	1.0 fF
- Snubber resistance $0.01\ \Omega \leq R_3 \leq 1000\ \Omega$:	0.1 Ohm

Maximum output voltage in steady state:	122.82	**V**
Average output voltage in steady state:	48.33	**V**
Output voltage overshoot:	74.49	**V**
Average output power in steady state:	58.51	**W**
Average input power in steady state:	60.84	**W**
Circuit efficiency:	96.17	**%**

How was the solution obtained and why are the modifications so effective?