Duke Energy Emerging Technology Office

Lesson Learned from Duke Energy's Mount Holly Microgrid Test Site

Stuart Laval

About Duke Energy

- One of the Largest Electric Holding Companies in the United States
- Electric Utility operations in North and South Carolina, Indiana, Ohio, Kentucky, Tennessee, and Florida serving **7.5 million customers**
- **50,000 MW** of regulated generation
- **6,500 MW Renewables to Date:**
  - 3,000 MW of wind
  - 1000 MW of solar
  - 40 MW of battery energy storage
- **Renewable Goals:**
  - 8,000 MW of wind/solar/biomass by 2020
  - 300 MW of battery energy storage by 2025

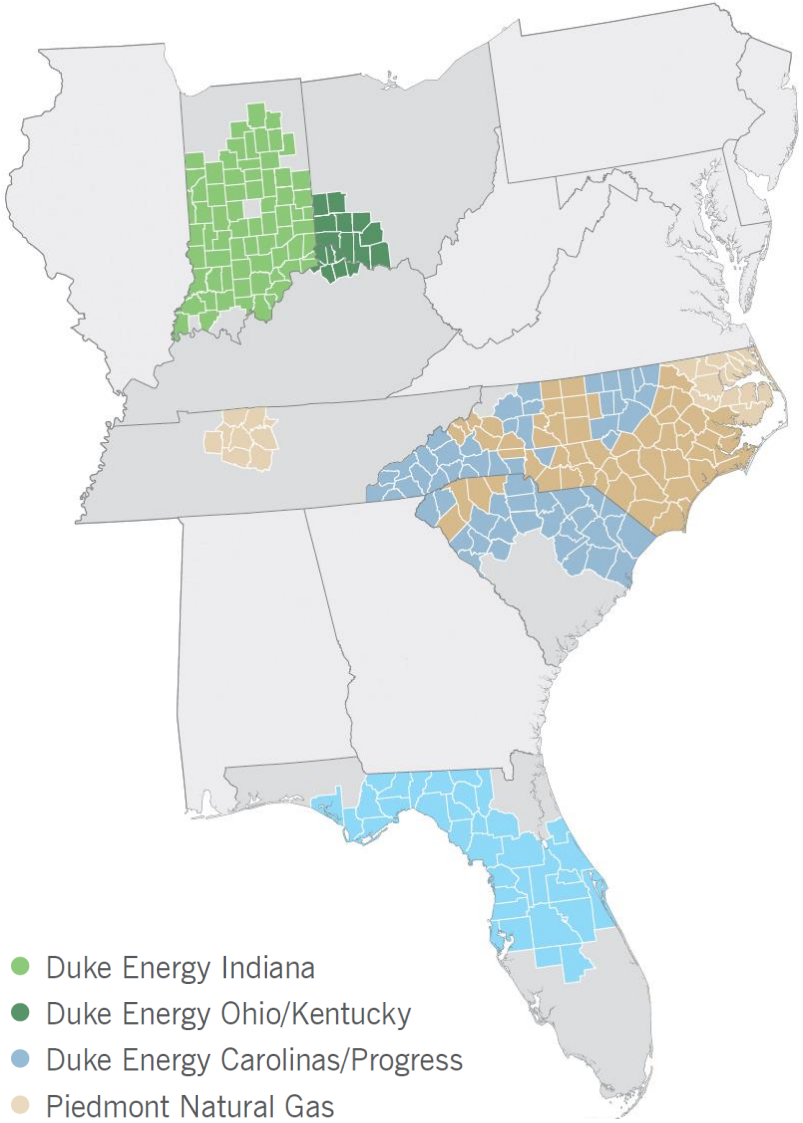

- Duke Energy Indiana
- Duke Energy Ohio/Kentucky
- Duke Energy Carolinas/Progress
- Piedmont Natural Gas
- Overlapping territory (Duke Energy/Piedmont Natural Gas)
- Duke Energy Florida

Impacts and Pain Points of DER Adoption

- Many Utilities committing to achieve Net Zero Carbon by 2050
  - Enhanced Distribution and Integrated Resource Planning tools
  - High DER Penetration with Bi-directional real and reactive power flow
  - Responsive, proactive, and dynamic Grid Management with Load shaping capabilities
- FERC 2222/841 opening up wholesale markets to all DERs
  - Fleet level aggregated views for Transmission & Distribution Control Centers
  - Secure communications and dispatch schedules to remote Grid/DER assets
  - Federated approach required to simplify complexity of Grid Operations
- Inverter-based Grid-Forming DERs/Microgrids pose interconnection issues
  - System impact studies leverage static tools without high-fidelity models of inverter controls
  - Limited understanding of island operation in coordination with automated protection schemes
  - PQ ramp rates are slowed down to dampen voltage impacts
  - Low inverter fault currents impacting microgrid system grounding design
  - Circuit re-energization challenges during black-start
  - Traditional brute-force methods for mitigating inadvertent islands
  - Many microgrid & battery storage deployments being limited to parallel operation only
- Grid Controls being delegated to Substation or Localized Circuit Segments
  - Starts with large grid-tied DERs & microgrids with gradual transition to full circuit
  - Grid-edge deployments of micro-SCADA and localized controllers expected
  - Dynamic topologies, via HIL, help assess Transient/Stability, Protection, Grounding, & Power Quality
  - New toolsets, procedures, and design standards for streamlining DER interconnection
  - Plug-n-play interoperability and multi-objective use-cases being standardized at the feeder level

Viable Distributed Intelligence (DI) Frameworks

DOE PNNL's Grid Architecture 2.0: Laminar Coordination Framework (LCF)

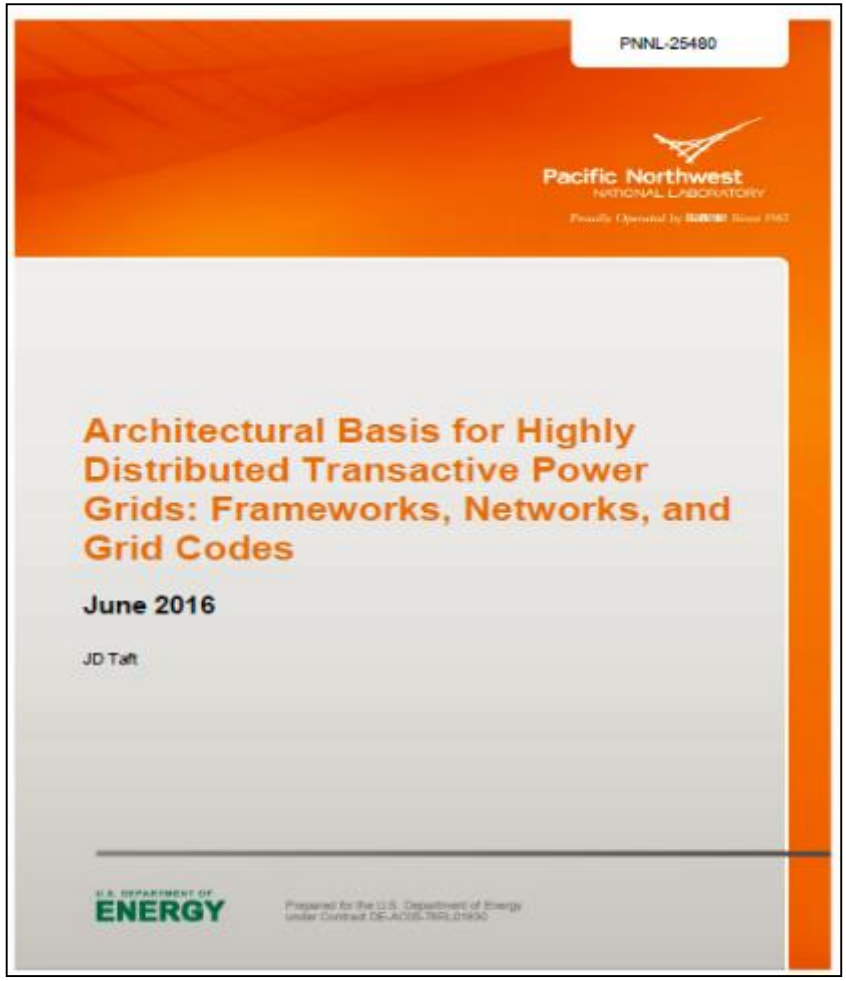
PNNL-25480

Pacific Northwest NATIONAL LABORATORY

Architectural Basis for Highly Distributed Transactive Power Grids: Frameworks, Networks, and Grid Codes

June 2016

JD Taft

U.S. DEPARTMENT OF ENERGY

PNNL-25480 (Courtesy of JD Taft)
Available at http://gridarchitecture.pnnl.gov/

UCAlug's Open Field Message Bus (OpenFMB): Internet of Things (IoT) Interoperability Framework


NAESB

North American Energy Standards Board
Retail Gas Quadrant
Retail Electric Quadrant
Model Business Practices

Open Field Message Bus (OpenFMB)

Version 3.3
January 30, 2020

Copyright © 2016-2020 North American Energy Standards Board, Inc.
All rights reserved.

NAESB RMQ.26 Version 3.3
Please contact naesb@naesb.org

UCAIug: Supporting all Control Paradigms and Data Models

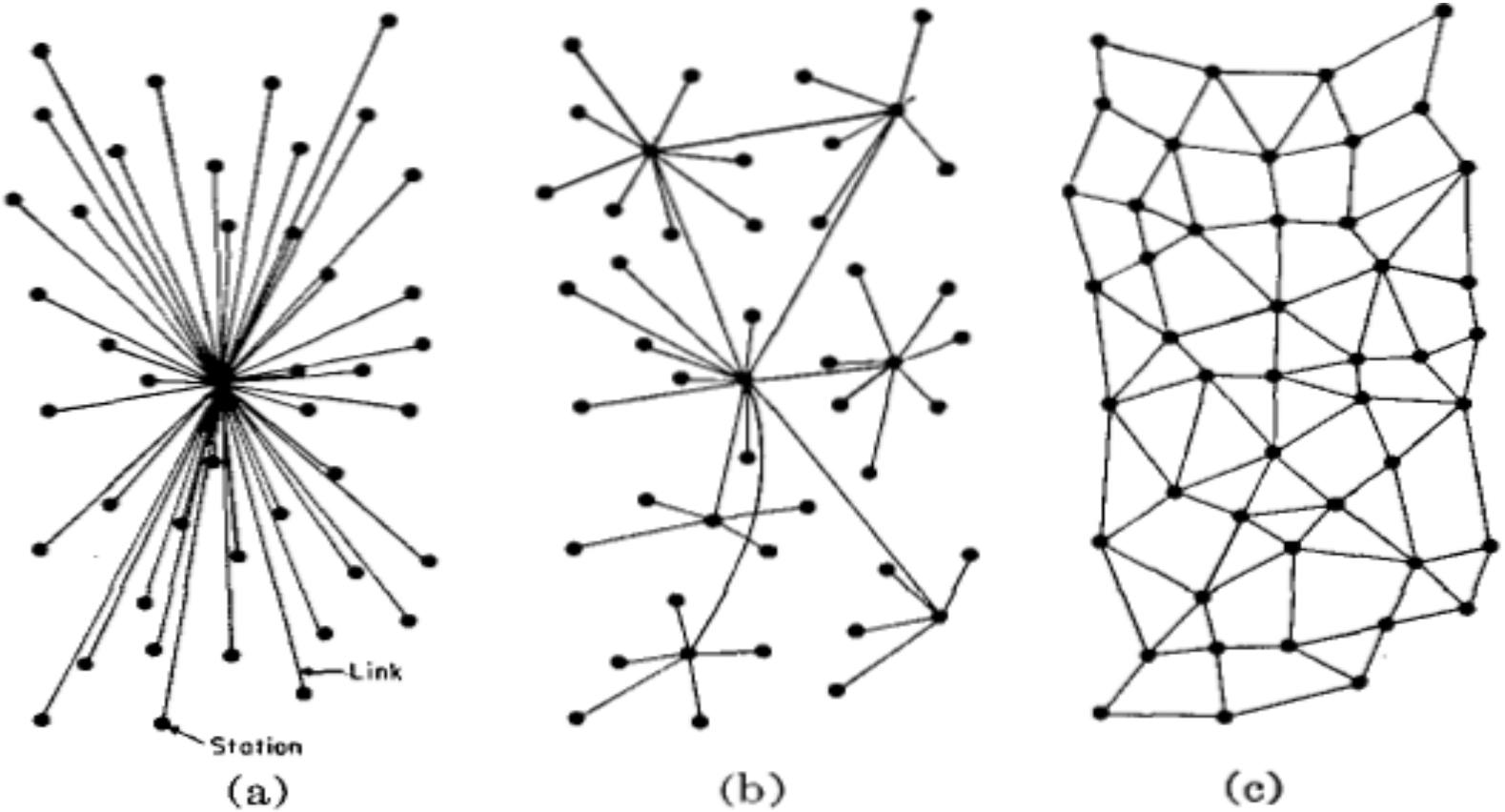

Fig. 1—(a) Centralized. (b) Decentralized. (c) Distributed networks.

Common Information Model (CIM)

IEC 61850

Open Field Message Bus (OpenFMB)

IEEE P2030.7: Example Hierarchy in Microgrid Controls

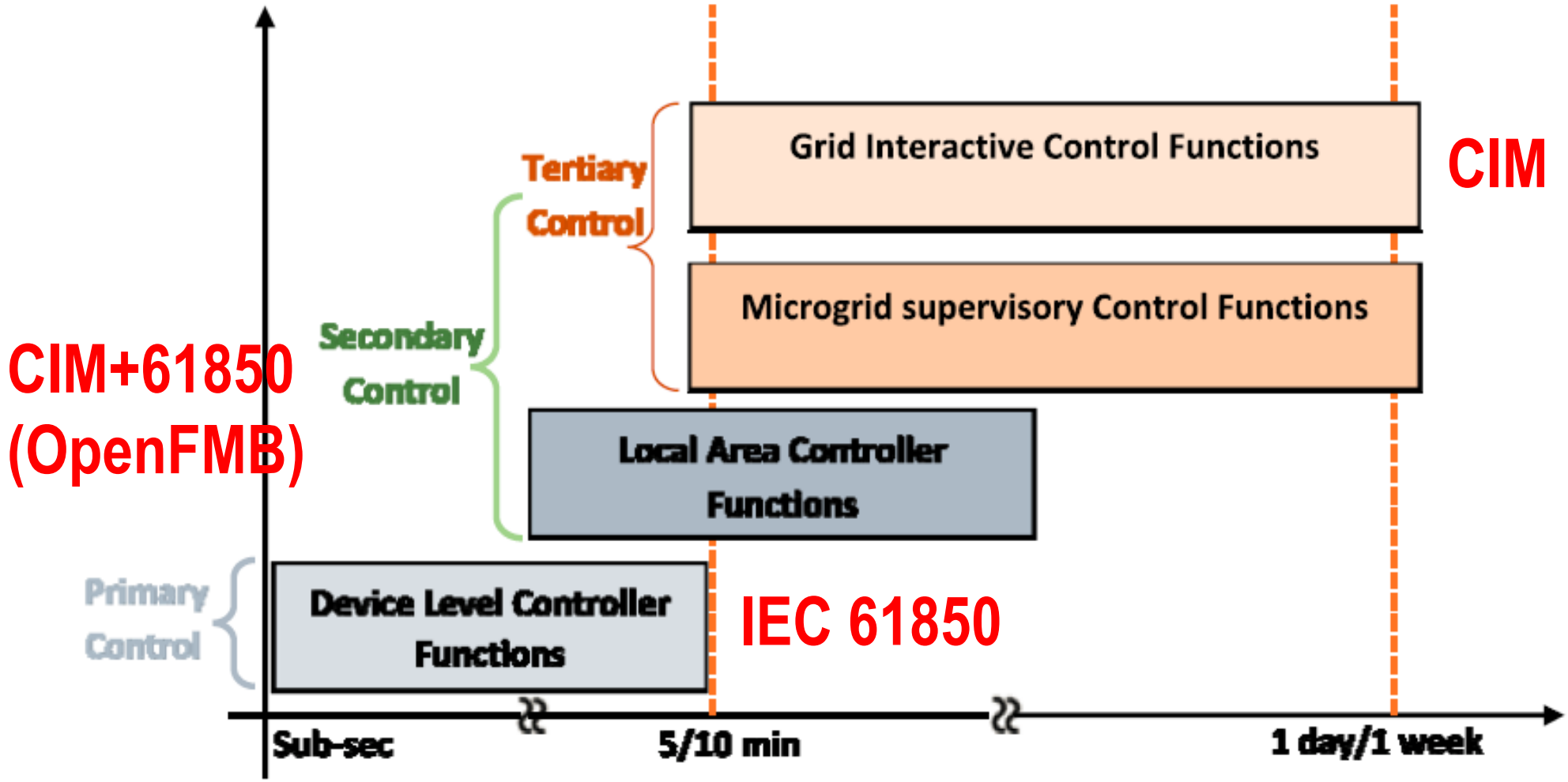

Source: IEEE

Securely Federated Deterministic Exchanges with Flexible Protocol Interfaces

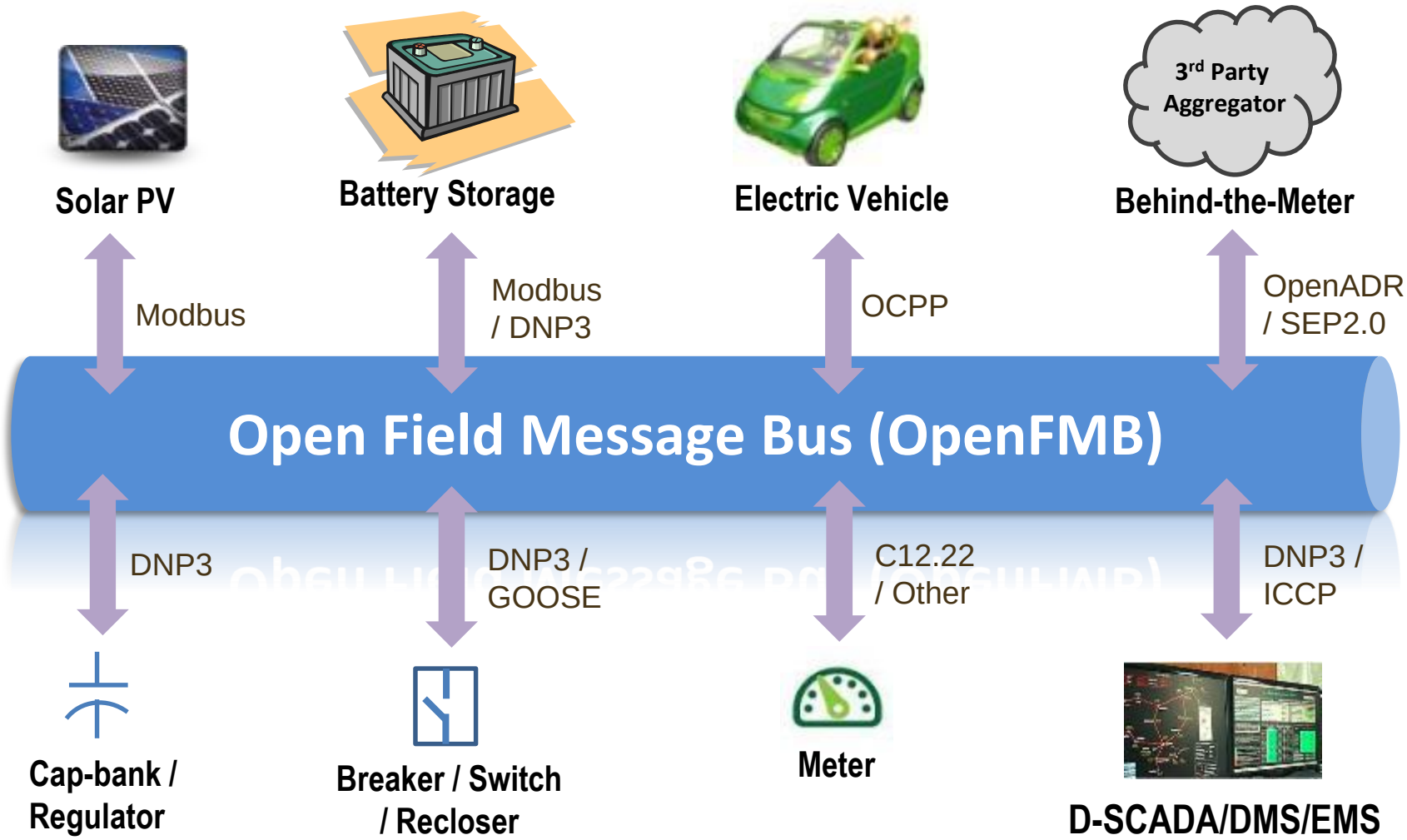

Readings

KW A/B/C
KVAR A/B/C
V A/B/C
I A/B/C
PhaseΦ A/B/C
KWh
TimeStamp
State of Charge

Status, Events, & Controls

Trip / Open
TimeStamp

Periodic Readings - Pub every few secs or near-real-time
Data-Driven Events – on status change in near-real-time

Example Microgrid Use-Case: Solar Smoothing

1 Hour Snapshot

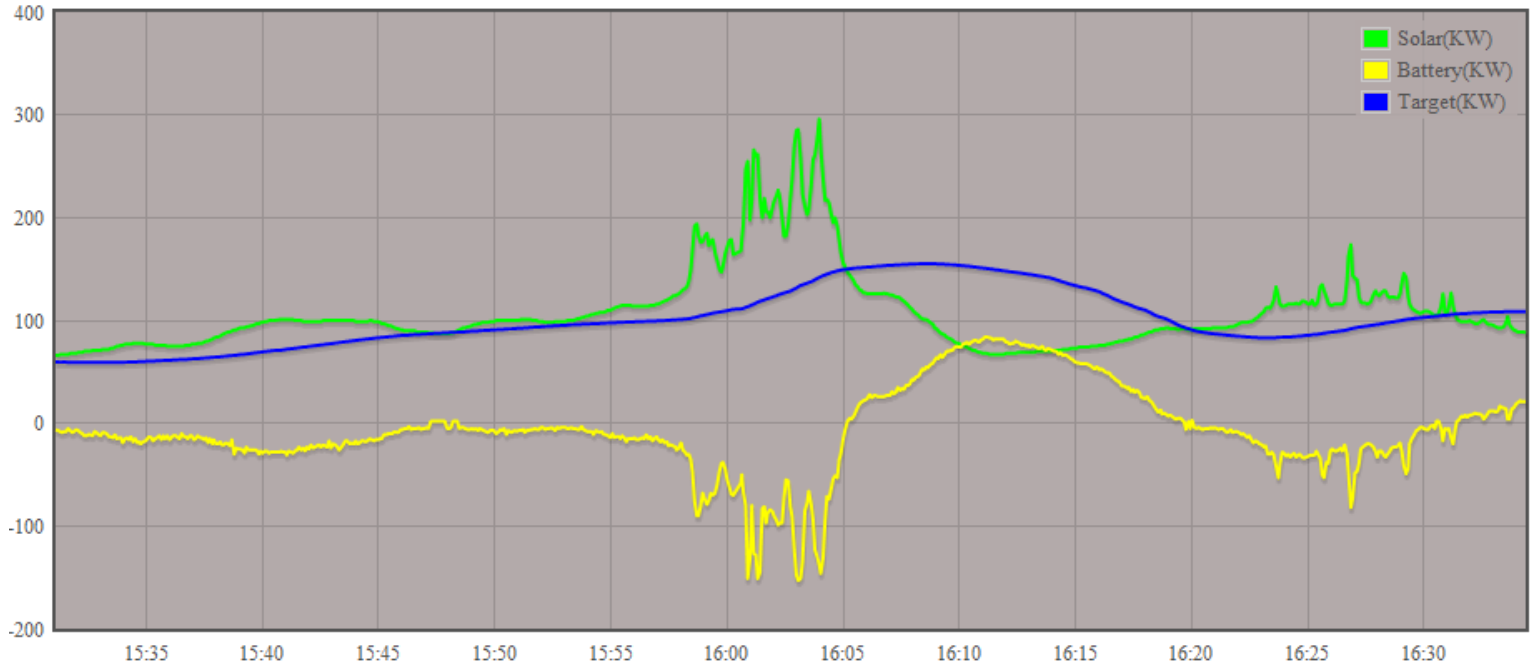

12 Hour Waveform

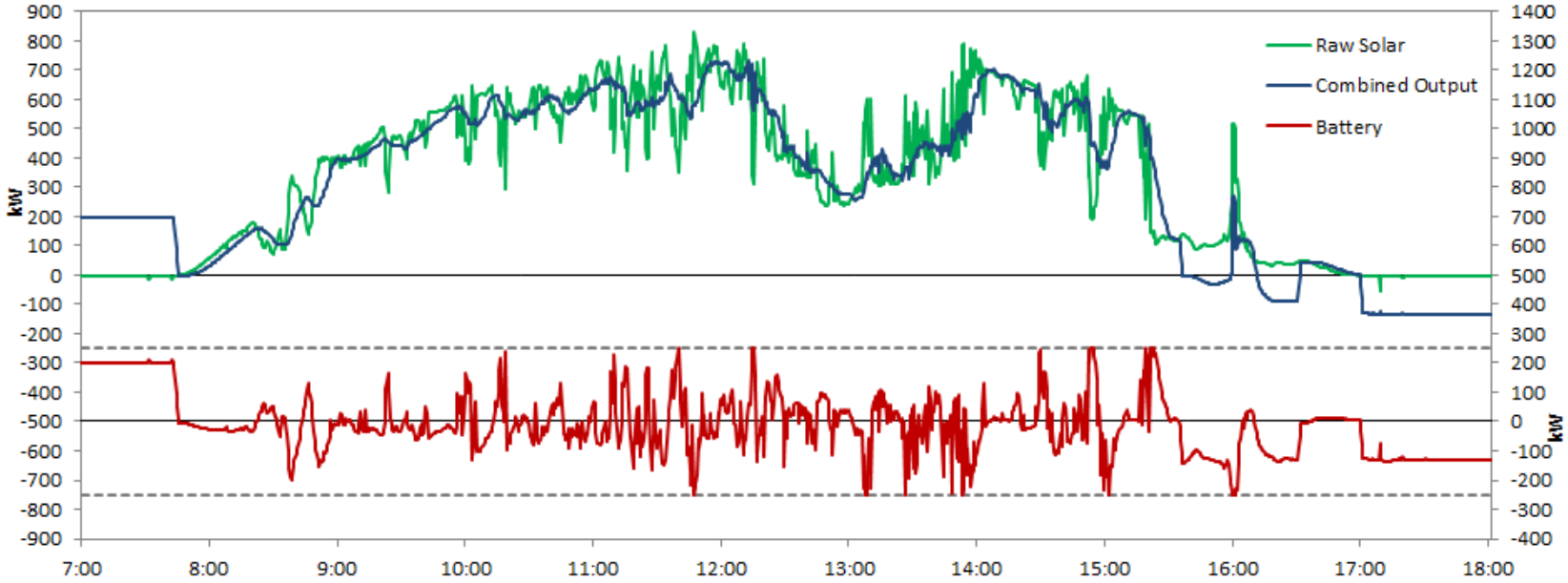

Duke Energy Microgrid Test Site in Mount Holly, NC

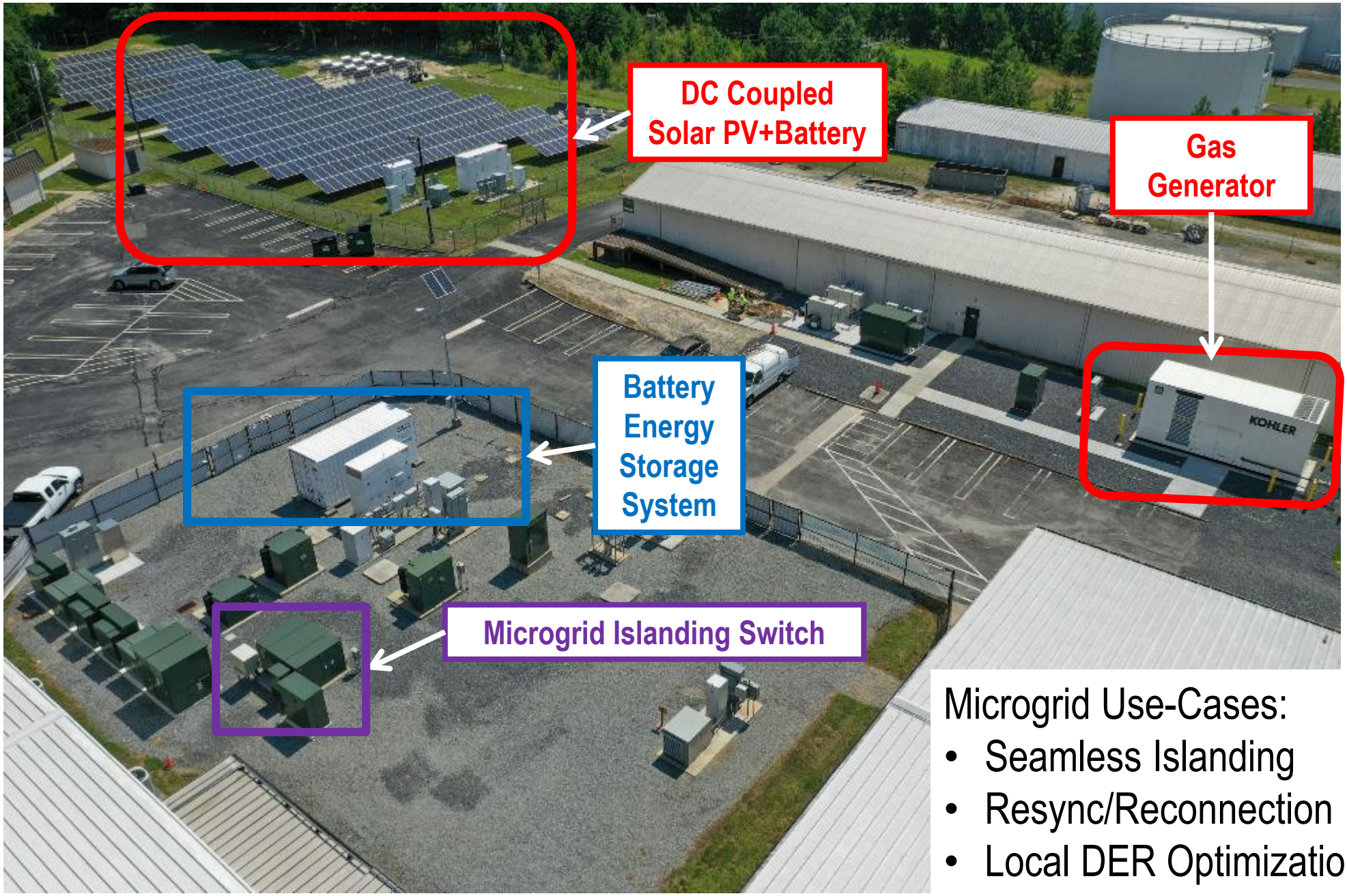

Microgrid Use-Cases:

- Seamless Islanding
- Resync/Reconnection
- Local DER Optimization

Mount Holly Microgrid Test Site Continued

Verizon 4G LTE and 5G LTE Small-Cells

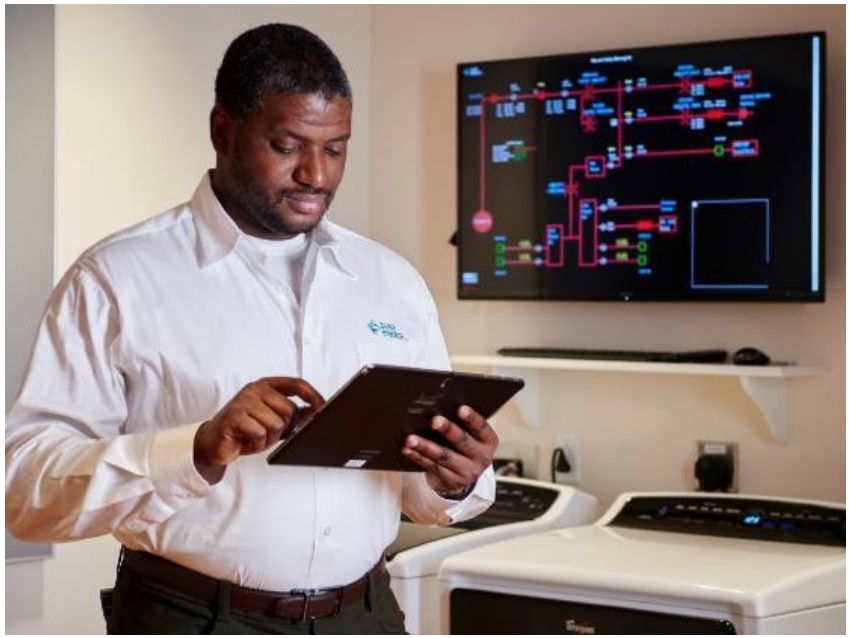

Internet of Things User Interfaces

Home Automation Area

EV Carport with Rooftop Solar PV

Mount Holly Hardware-in-the-Loop (HIL) Simulation Lab

"Digital Twin" allows validating new grid applications before deploying in the field

Duke Energy T&D World Publications

T&D World March 2017 issue

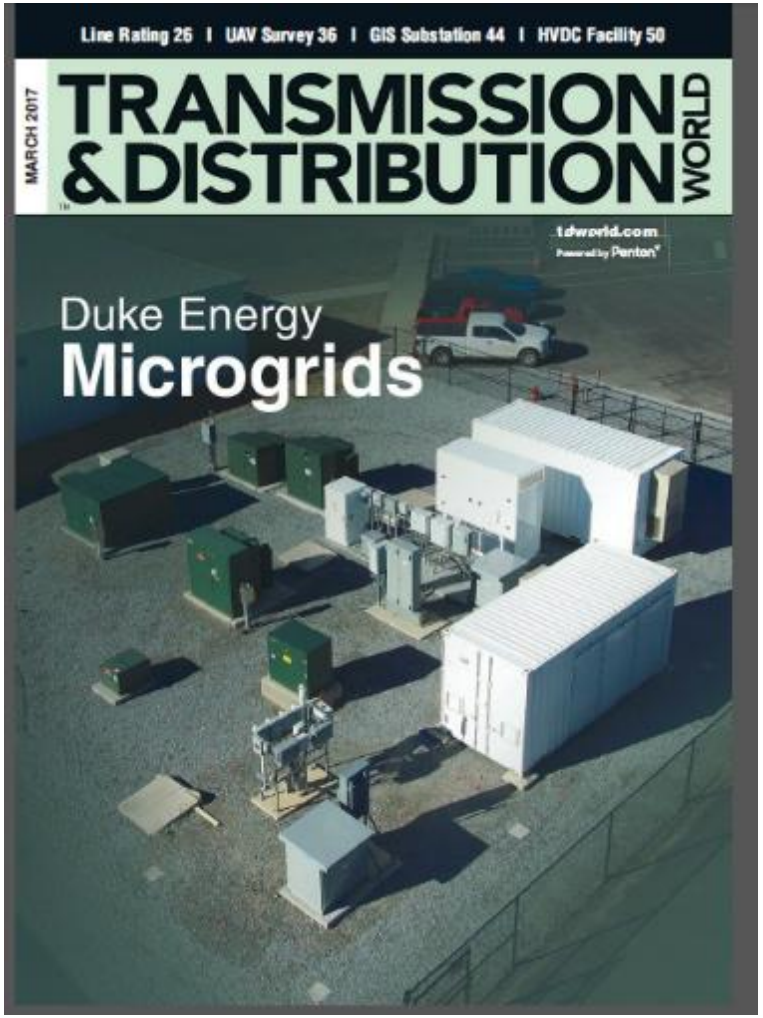

tdworld.com/march-2017

T&D World March 2019 issue

Avista Utilities and Duke Energy partner to create an energy operating system available to the entire utility industry.

By **Curtis Kirkeby**, Avista Utilities Inc., and **Stuart Laval**, Duke Energy Corp.

The electric utility industry is increasingly challenged by external drivers such as regulatory obligations and mandates as well as competitors who want to disintermediate utility customers from their current energy provider. Distribution system operator (DSO) models and aggregator participation are challenging the status quo for utility business models.

The utility industry must navigate these changes and help to shape the new business models while still providing safe, reliable and affordable energy to customers. At the same time, customer participation should be empowered, so there is reasonable influence on the type of resource consumed, the location of the resource, and who provides the energy. This is extremely challenging to support with a typical utility's portfolio of operating technologies.

Duke Energy Mount Holly, NC Microgrid Site

May 2019 | T&D World 49

https://utilityanalytics.com/2019/06/utilities-collaborate-on-open-source-software/

Microgrid Lessons Learned

- #1: Interoperability unlocks product limitations
  - Some technologies did not initially produce information to run distributed applications
  - Distributed control sequences need to be choreographed to reflect latencies of communications and applications
    - Accurate short-term forecast becomes key input for optimization
  - Microgrid operations require more precise performance
    - Time accuracy and synchronization are paramount
    - Granular and accurate sensor data is critical
  - Most hardware challenges were resolved with OpenFMB
  - Vendor partners' skills and insights necessary for refining final solution

Microgrid Lessons Learned Con't

- #2: Integration of Disparate Assets
  - Successful FAT of equipment doesn't entail system acceptance with DERs
  - Standard product settings might not be desired configuration.
  - New control schemes within microgrid will need further refinement

Microgrid Lessons Learned Con't

- #3: Field Commissioning Coordination
  - Variety of assets with different time lines on drawings and installation
  - Different connectivity diagrams and associated skillsets by voltage levels
    - Power delivery engineers handle drawings for 12KV primary
    - Electricians handle 277/480V and 120/208/240V secondary levels
    - IT staff used for 12/24/48VDC wiring of telecommunications & UPS.

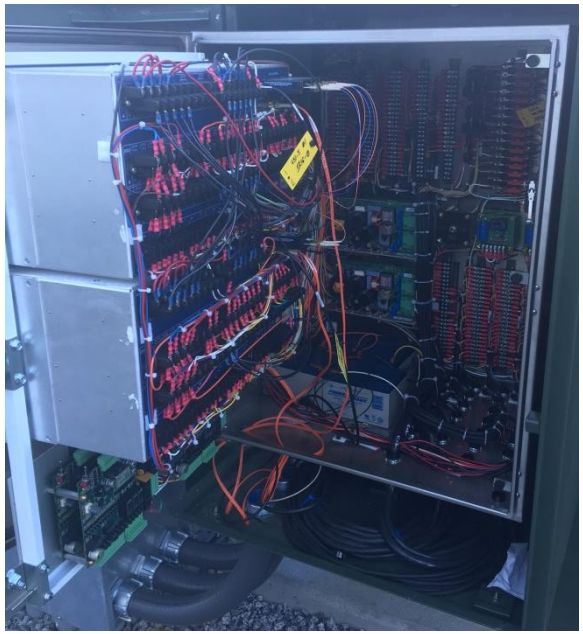

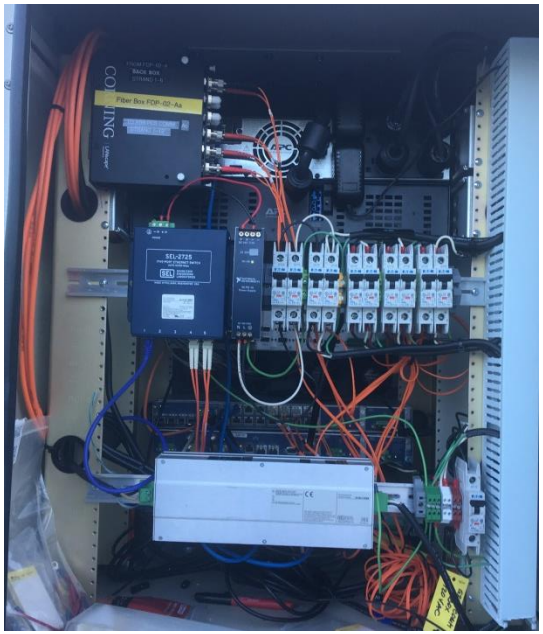

Microgrid Lessons Learned Con't

- #4: Understanding of Load Diversity
  - Minimum, Maximum, and Average Loads
  - Proper distributed generation / storage mix
  - Optimal capacity ratings

- #5: Supplemental Engineering Studies
  - DER's connected to 480/277V Y-grounded system.
  - Microgrid Loads are 120/240V and 277/480V
  - Most power systems planning tools don't model secondary side
    - Steady-state modeling: Only grid-connected mode
    - Short-circuit studies: Fault transients, trip settings
    - DC arc-flash analysis: Warning labels, fire-suppression placement

Microgrid Lessons Learned Con't

- #6: Grounding Considerations for Protection
  - Inverter output voltages are random (315, 347, 380V)
  - **Y-grounded-Y(floating)** vs. **Y-grounded-Delta** at Inverters
  - **Grid-Connected mode** vs. **Island-mode** Transformer Configurations

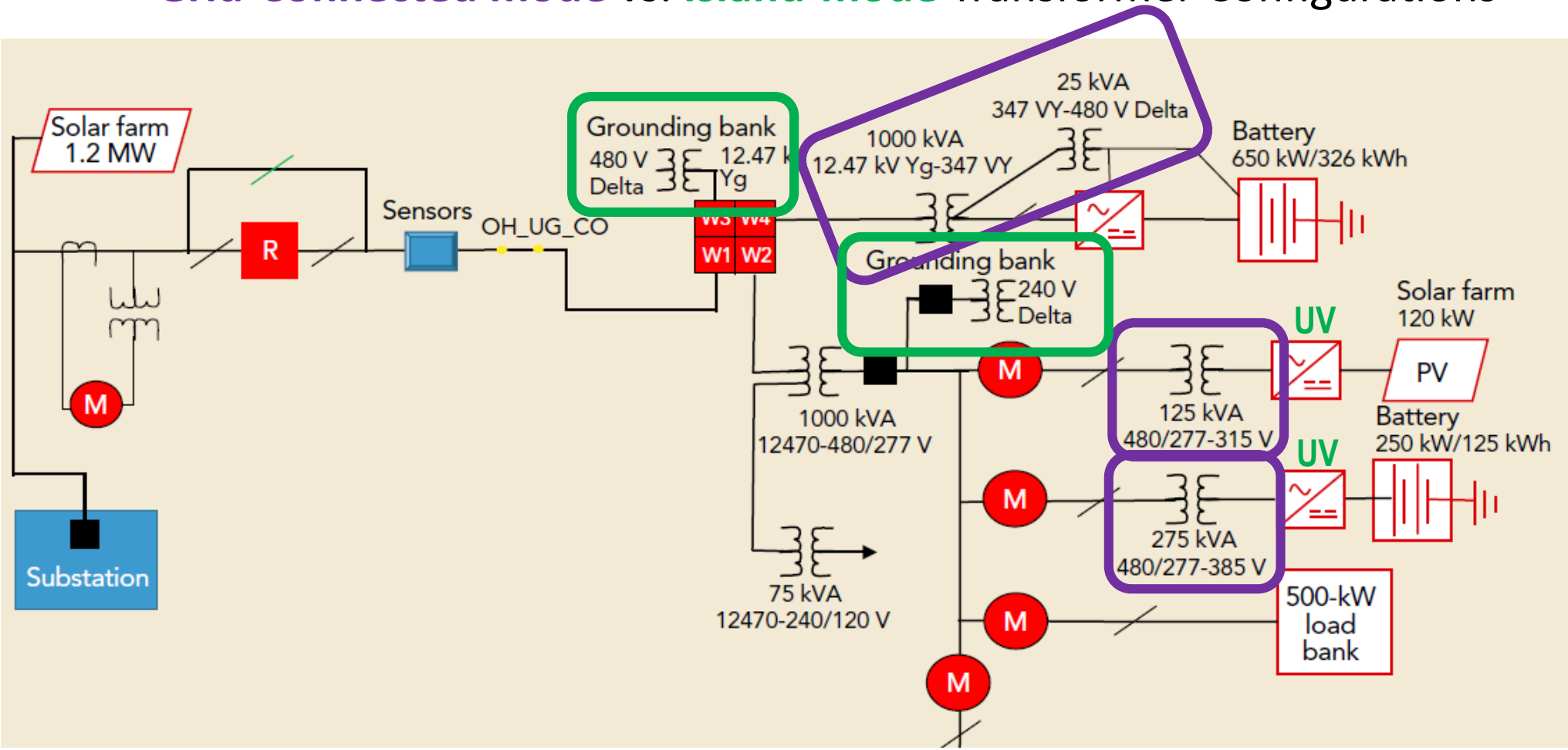

Microgrid Lessons Learned Con't

- #7: Battery Challenges
  - Low-inertia microgrids are a function of Battery System's reliability
  - Thermal management is most important aspect of Li-Ion batteries
  - HVAC system is the "Achilles Heel" of battery storage systems
  - Auxiliary power for parasitic loads can be 10% of battery KW rating!
    - "Battery is like a bucket of water with a hole on the bottom."
- #8: Backup Power
  - Traditional microgrids have auxiliary power from alternate AC source.
  - Seamless Islanding microgrids require UPS for all critical devices
    - Telecom cabinets fed by a single UPS sourced from a 208VAC transformer tied to the 480V transformer behind PCC.
    - Alternatively, Internal UPS inside each cabinet

Microgrid Lessons Learned Con't

- #9: Backfeed Restrictions
  - Interconnection process might take longer than microgrid schedule
  - Interconnection agreement might not allow DER export onto grid
    - Net-zero optimization for charging battery when PV exceeds load
    - Loadbank needed if battery becomes too full on sunny days.

Microgrid Lessons Learned Con't

- #10: Continuous Island Operation
  - Extended island operation with only PV and Battery as Distributed Gen would require excessive oversizing to sustain critical load.
  - Multiple DER systems could extend island operations
    - Using same battery system for voltage source mode and energy support in absence of PV can result in outage due to UV condition.
    - Paralleling a distributed generator with battery storage system can extend island operation

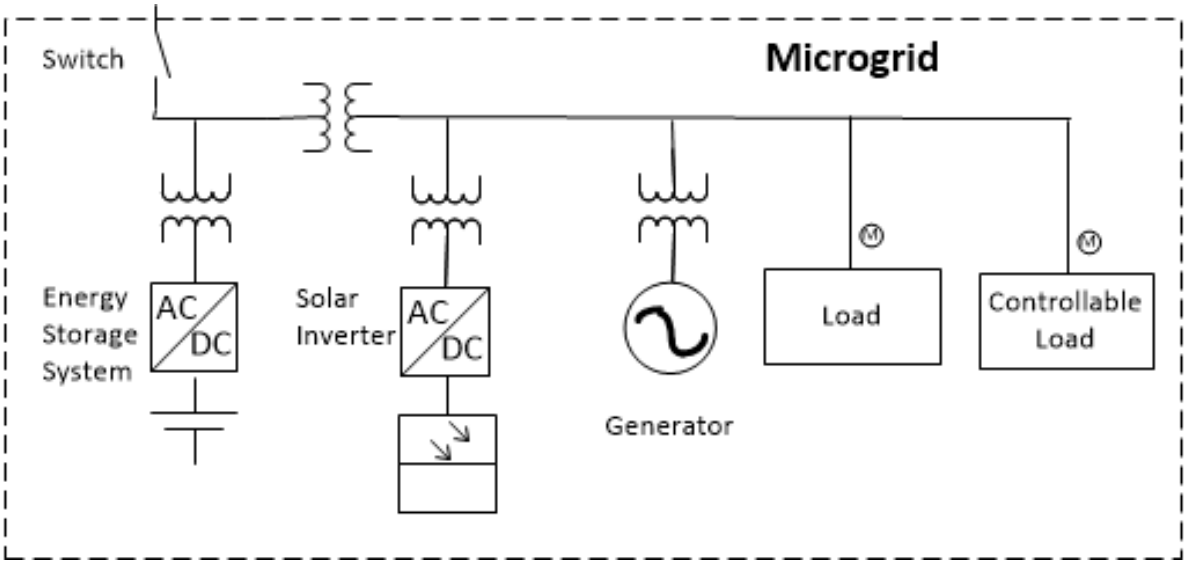

Duke Energy Feeder Test Site in Mount Holly, NC

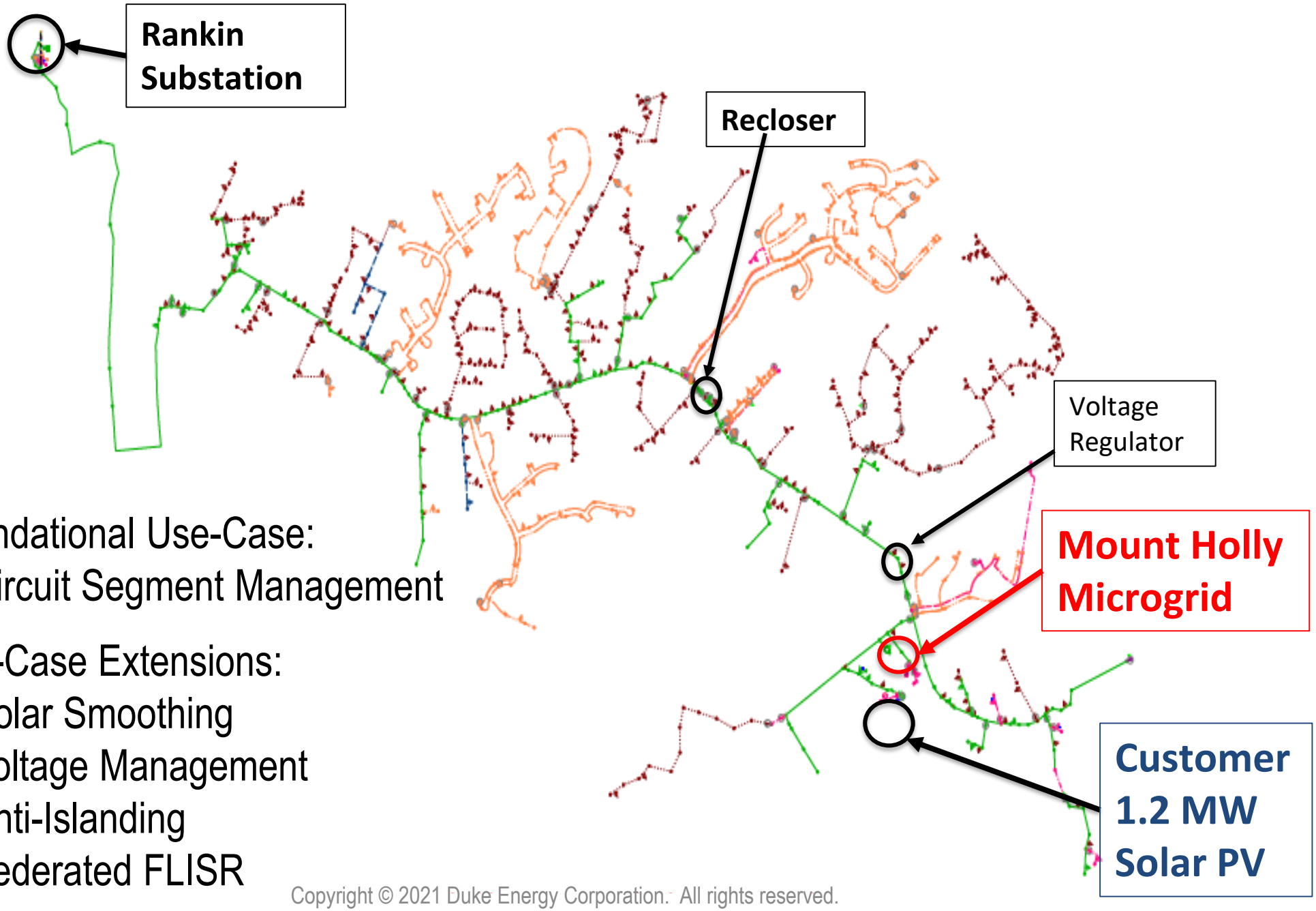

Foundational Use-Case:

- Circuit Segment Management

Use-Case Extensions:

- Solar Smoothing
- Voltage Management
- Anti-Islanding
- Federated FLISR

Thank You!

For more information contact:

Stuart Laval, Duke Energy
Stuart.Laval@duke-energy.com